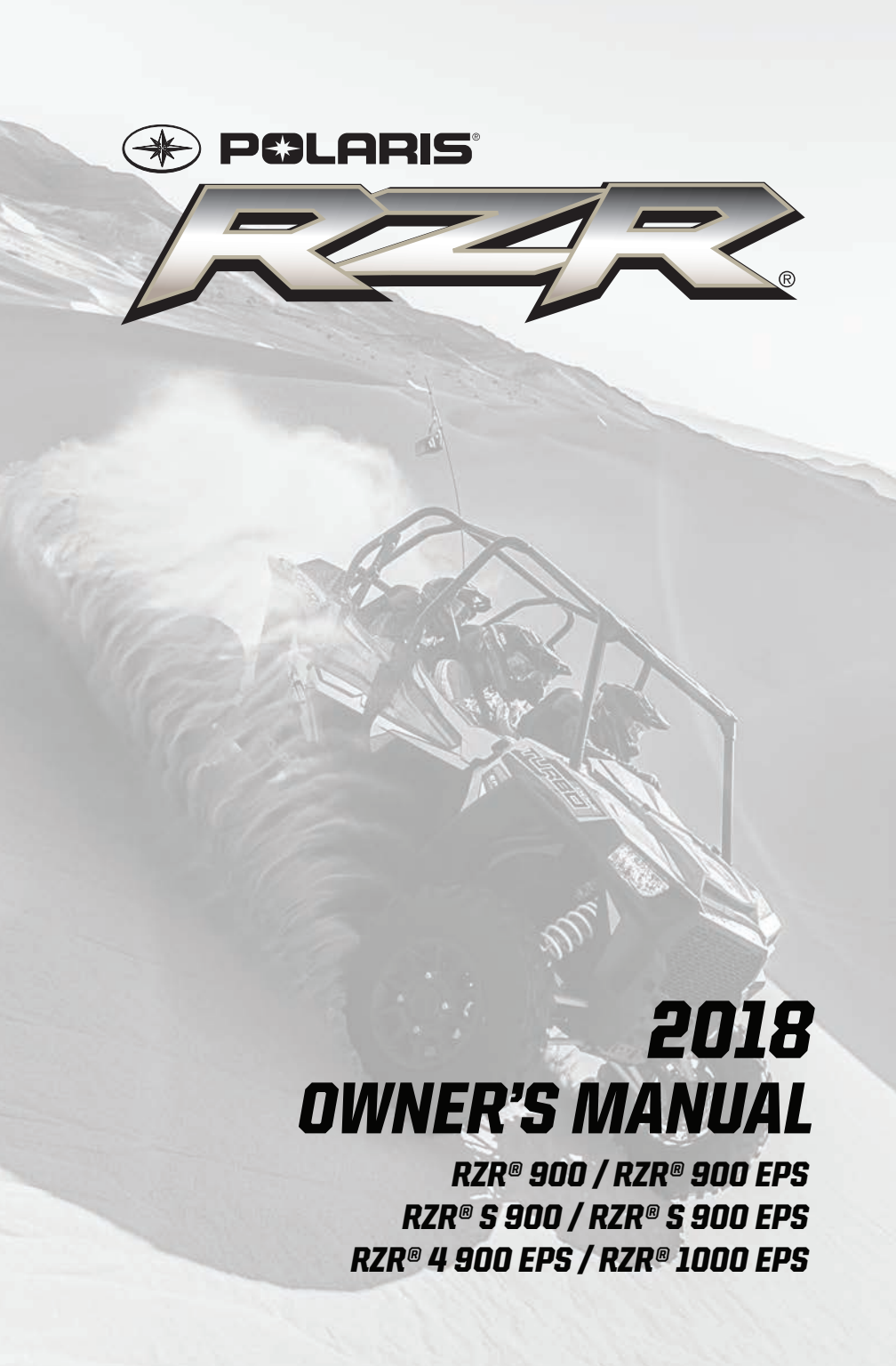

2018 OWNER'S MANUAL

RZR® 900 / RZR® 900 EPS
RZR® S 900 / RZR® S 900 EPS
RZR® 4 900 EPS / RZR® 1000 EPS

⚠ WARNING

Read, understand, and follow all of the instructions and safety precautions in this manual and on all product labels.

Failure to follow the safety precautions could result in serious injury or death.

⚠ WARNING

The engine exhaust from this product contains chemicals known to the State of California to cause cancer, birth defects or other reproductive harm.

For videos and more information about a safe riding experience with your Polaris vehicle, scan this QR code with your smartphone.

WELCOME

Thank you for purchasing a POLARIS vehicle, and welcome to our world-wide family of POLARIS enthusiasts. Be sure to visit us online at www.polaris.com for the latest news, new product introductions, upcoming events, career opportunities and more.

Here at POLARIS we proudly produce an exciting line of utility and recreational products.

- Snowmobiles
- All-terrain vehicles (ATVs)
- Low emission vehicles (LEVs)
- *RANGER*® utility vehicles
- BRUTUS® work vehicles
- SLINGSHOT® three wheel motorcycles
- *RZR*® sport vehicles
- GEM® electric vehicles
- VICTORY® motorcycles
- INDIAN® motorcycles
- POLARIS POWER® generators
- POLARIS DEFENSE® combat vehicles

We believe POLARIS sets a standard of excellence for all utility and recreational vehicles manufactured in the world today. Many years of experience have gone into the engineering, design, and development of your POLARIS vehicle, making it the finest machine we've ever produced.

For safe and enjoyable operation of your vehicle, be sure to follow the instructions and recommendations in this owner's manual. Review the safety DVD that came with your vehicle. Polaris also recommends that all drivers take the ROHVA safety e-course and a ROHVA hands-on safety training course (www.rohva.org).

Your manual contains instructions for minor maintenance, but information about major repairs is outlined in the POLARIS Service Manual and can be performed by a factory certified Master Service Dealer® (MSD) Technician.

Your POLARIS dealer knows your vehicle best and is interested in your total satisfaction. Your POLARIS dealership can provide for all of your service needs during, and after, the warranty period.

POLARIS®

For a closer look at your RZR's features and recommended maintenance, scan this QR code with your smartphone.

POLARIS® and RZR® are trademarks of POLARIS Industries Inc.

Copyright 2017 POLARIS Industries Inc. All information contained within this publication is based on the latest product information at the time of publication. Due to constant improvements in the design and quality of production components, some minor discrepancies may result between the actual vehicle and the information presented in this publication. Depictions and/or procedures in this publication are intended for reference use only. No liability can be accepted for omissions or inaccuracies. Any reprinting or reuse of the depictions and/or procedures contained within, whether whole or in part, is expressly prohibited.

The original instructions for this vehicle are in English. Other languages are provided as translations of the original instructions.

Printed in U.S.A.

2018 RZR 900 / RZR S 900 / RZR 4 900 / RZR S 1000 EPS Owner's Manual

P/N 9928355

TABLE OF CONTENTS

Introduction 4
Safety 7
Features and Controls 25
Operation 49
Winch Guide 69
Emission Control Systems 80
Maintenance 81
Specifications 132
POLARIS Products 140
Troubleshooting 141
Warranty 145
Maintenance Log 152
Index 154

INTRODUCTION

The *RZR* is an off-road vehicle. Familiarize yourself with all laws and regulations concerning the operation of this vehicle in your area.

The following signal words and symbols appear throughout this manual and on your vehicle. Your safety is involved when these words and symbols are used. Become familiar with their meanings before reading the manual.

The safety alert symbol indicates a potential personal injury hazard.

DANGER

A DANGER indicates a hazardous situation that, if not avoided, will result in death or serious injury.

WARNING

A WARNING indicates a hazardous situation that, if not avoided, could result in death or serious injury.

CAUTION

A CAUTION indicates a hazardous situation that, if not avoided, could result in minor or moderate injury.

NOTICE

A NOTICE indicates a situation that could result in property damage.

The Prohibition Safety Sign indicates an action NOT to take in order to avoid a hazard.

The Mandatory Action Sign indicates an action that NEEDS to be taken to avoid a hazard.

⚠ WARNING

Failure to heed the warnings and safety precautions contained in this manual can result in severe injury or death. Your POLARIS vehicle is not a toy and can be hazardous to operate. This vehicle handles differently than cars, trucks or other off-road vehicles. A collision or rollover can occur quickly, even during routine maneuvers like turning, or driving on hills or over obstacles, if you fail to take proper precautions.

- Read this owner's manual and review the safety DVD that came with your vehicle. A free extra copy of the DVD can be obtained by contacting your local POLARIS dealer. Understand all safety warnings, precautions and operating procedures before operating the vehicle. Keep this manual with the vehicle.
- This vehicle is an ADULT VEHICLE ONLY. You MUST be at least age 16 and have a valid driver's license to operate this vehicle.
- All riders must be able to sit with backs against the seat, both feet flat on the floor and both hands on the steering wheel (if driving) or on a passenger hand hold.
- Always use the cab nets (or doors) while riding in this vehicle. Always keep hands, feet and all other body parts inside the vehicle at all times.
- Always wear a seat belt when riding in this vehicle. Always wear a helmet, eye protection, gloves, long-sleeve shirt, long pants and over-the-ankle boots.
- Never use this vehicle with drugs or alcohol, as these conditions impair judgment and reduce operator reaction time.
- Complete the New Operator Driving Procedures outlined on pages 55-56. Never allow a guest to operate this vehicle until the guest has completed the New Operator Driving Procedures.

European Vibration and Noise

The driver-perceived noise and hand/arm and whole body vibration levels of this machinery is measured per prEN 15997.

The operating conditions of the machinery during testing:

The vehicles were in like-new condition. The environment was controlled as indicated by the test procedure(s).

The uncertainty of vibration exposure measurement is dependent on many factors, including:

- Instrument and calibration uncertainty
- Variations in the machine such as wear of components
- Variation of machine operators such as experience or physique
- Ability of the worker to reproduce typical work during measurements
- Environmental factors such as ambient noise or temperature

INTRODUCTION
Vehicle Identification Numbers

Record your vehicle's identification numbers and key number in the spaces provided. Remove the spare key and store it in a safe place. An ignition key can be duplicated only by ordering a POLARIS key blank (using your key number) and mating it with one of your existing keys. The ignition switch must be replaced if all keys are lost.

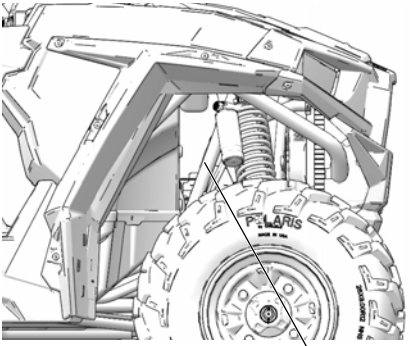

Vehicle Identification Number

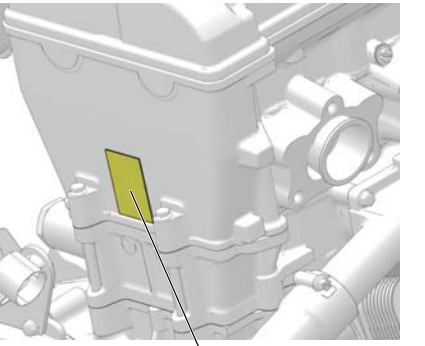

Engine Serial Number

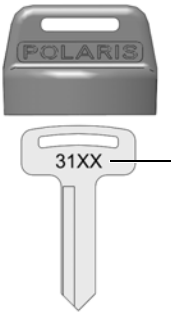

Key Number

Vehicle Model Number: _____

Vehicle Identification Number (VIN): _____

Engine Serial Number: _____

Key Number: _____

Safety Training

Safety training is a top priority for POLARIS. POLARIS strongly encourages you and any family members who will be riding this vehicle to take a training course.

ROHVA (Recreational Off-Highway Vehicle Association) provides both an online safety e-course and a hands-on safety course. To access this valuable training, visit www.rohva.org.

Your POLARIS vehicle is considered an off-road vehicle. Familiarize yourself with all laws and regulations concerning the operation of this vehicle in your area.

We strongly advise you to strictly follow the recommended maintenance program outlined in your owner's manual. This preventive maintenance program is designed to ensure that all critical components on your vehicle are thoroughly inspected at specific intervals.

For more information about recreational off-road vehicle safety in the United States, visit www.rohva.org or call POLARIS at 1-800-342-3764.

SAFETY
Safe Riding Gear

The driver and all passengers must wear helmet, eye protection, gloves, long-sleeve shirt, long pants, over-the-ankle boots and seat belt at all times. Protective gear reduces the chance of injury.

Helmet

Wearing a helmet can prevent a severe head injury. Whenever riding this POLARIS vehicle, always wear a helmet that meets or exceeds established safety standards.

Approved helmets in the USA and Canada bear a U.S. Department of Transportation (DOT) label.

Approved helmets in Europe, Asia and Oceania bear the ECE 22.05 label. The ECE mark consists of a circle surrounding the letter E, followed by the distinguishing number of the country which has granted approval. The approval number and serial number will also be displayed on the label.

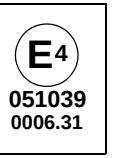

Safe Riding Gear

Eye Protection

Do not depend on eyeglasses or sunglasses for eye protection. Whenever riding this POLARIS vehicle, always wear shatterproof goggles or use a shatterproof helmet face shield. POLARIS recommends wearing approved Personal Protective Equipment (PPE) bearing markings such as VESC 8, V-8, Z87.1, or CE. Make sure protective eye wear is kept clean.

Gloves

Wear gloves for comfort and for protection from sun, cold weather and other elements.

Boots

Wear sturdy over-the-ankle boots for support and protection. Never ride a POLARIS vehicle with bare feet or sandals.

Clothing

Wear long sleeves and long pants to protect arms and legs.

Rider Comfort

Under certain operating conditions, heat generated by the engine and exhaust system can elevate temperatures in the driver and passenger cab area. The condition occurs most frequently when a vehicle is being operated in high ambient temperatures at low speeds and/or high load conditions for an extended period of time. The use of certain windshield, roof and/or cab systems may contribute to this condition by restricting airflow. Any discomfort due to heat buildup in this area can be minimized by wearing proper riding apparel and by varying speeds to increase airflow.

SAFETY
Safety Labels and Locations

Warning labels have been placed on the vehicle for your protection. Read and follow the instructions of the labels on the vehicle carefully. If any of the labels depicted in this manual differ from the labels on your vehicle, always read and follow the instructions of the *labels on the vehicle*.

If an informational or graphic label becomes illegible or comes off, contact your POLARIS dealer to purchase a replacement. Replacement *safety* labels are provided by POLARIS at no charge. The part number is printed on the label.

Proper Use Warning

WARNING

Require Proper Use of Your Vehicle

Do your part to prevent injuries:

- Do not allow careless or reckless driving.
- Make sure operators are 16 or older with a valid driver's license.
- Do not let people drive or ride after using alcohol or drugs.
- Do not allow operation on public roads (unless designated for off-highway vehicle access) - collisions with cars and trucks can occur.
- **RZR/RZR S:** Do not exceed seating capacity: 2 occupants.
- **RZR 4:** Do not exceed seating capacity: 4 occupants.

Safety Labels and Locations

Drive Responsibly Warning

Drive Responsibly

Avoid loss of control and rollovers:

- Avoid abrupt maneuvers, sideways sliding, skidding or fishtailing, and never do donuts.
- Slow down before entering a turn.
- Avoid hard acceleration when turning, even from a stop.
- Plan for hills, rough terrain, ruts and other changes in traction and terrain.
- Avoid paved surfaces.
- Avoid sidehilling (riding across slopes).

Rollovers have caused severe injuries and death, even on flat, open areas.

7179761

Riders Warning

Be Sure Riders Pay Attention and Plan Ahead

If you think or feel the vehicle may tip or roll, reduce your risk of injury:

- Keep a firm grip on the steering wheel or hand holds and brace yourself.
- Do not put any part of your body outside of the vehicle for any reason.

Riders Warning

7179762

Seat Belt Warning

WARNING

Improper vehicle use can result in SEVERE INJURY or DEATH

Be Prepared

- Fasten seat belts.
- Wear an approved helmet and protective gear.
- ALWAYS use cab nets and/or doors.
- Each rider must be able to sit with back against seat, feet flat on the floor, and hands on steering wheel or hand holds. Stay completely inside the vehicle.

LOCATE AND READ OWNER'S MANUAL. FOLLOW ALL INSTRUCTIONS AND WARNINGS. ALWAYS REVIEW SAFETY VIDEO AND TAKE ROHVA TRAINING (rohva.org).

7179499

SAFETY

Safety Labels and Locations

Load/Passenger/Tire Pressure Warning

WARNING

- Never carry passengers in cargo box.
- Passengers can be thrown off. This can cause serious injury or death.

Load/Passenger/Tire Pressure Warning (in cargo box)

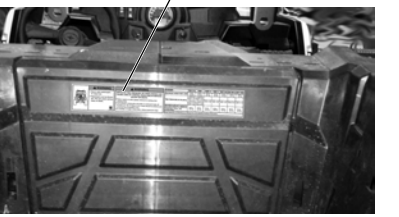

WARNING

IMPROPER TIRE PRESSURE OR OVERLOADING CAN CAUSE LOSS OF CONTROL RESULTING IN SERIOUS INJURY OR DEATH.

- Reduce speed and allow greater distance for braking when carrying cargo.
- Overloading or carrying tall, off-center, or unsecured loads will increase your risk of losing control. Loads should be centered and carried as low as possible in box.
- For stability on rough or hilly terrain, reduce speed and cargo.

	RZR	RZR S	RZR 4
MAXIMUM CARGO BOX LOAD	300 lbs. (136 kg)	300 lbs. (136 kg)	300 lbs. (136 kg)
TIRE PRESSURE IN PSI (KPa)	FRONT 10 (69) REAR 12 (83)	FRONT 10 (69) REAR 14 (97)	FRONT 16 (110) REAR 20 (138)
MAXIMUM WEIGHT CAPACITY INCLUDES WEIGHT OF OPERATOR, PASSENGER, CARGO AND ACCESSORIES	740 lbs. (336 kg)	740 lbs. (336 kg)	900 lbs. (408 kg)
Read Operation and Maintenance Manual for more detailed loading information.			

Fuel Transport Warning

WARNING

NEVER carry fuel or other flammable liquids on this vehicle. Failure to follow this instruction could lead to serious burn injuries or death

7185278

Safety Labels and Locations

Payload Warning

WARNING

MODEL	Never Exceed	If Total Payload Exceeds
RZR	43 MPH (69 km/h)	430 lbs. (195 kg)
RZR S	62 MPH (100 km/h)	430 lbs. (195 kg)
RZR 4	68 MPH (109 km/h)	860 lbs. (390 kg)

7182923

Belt Debris Warning

WARNING

Improper service or maintenance of this PVT system can result in vehicle damage, SEVERE INJURY or DEATH.

Always look for and remove debris inside and around the clutch and vent system when replacing the belt.

Read owner's manual or see authorized POLARIS dealer.

7177469

Air Box Caution

CAUTION

Use a Polaris approved air filter. The use of a non-Polaris approved air filter may cause engine damage. Before installing filter, ensure there is no dirt or debris in the clean side of the intake tube. The air filter must be properly seated before the lid is reinstalled. Please reference your owner's manual for additional information regarding air filter service.

7181111

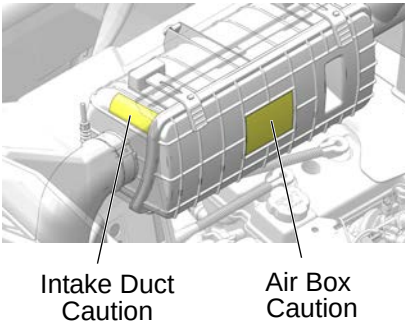

Intake Duct Caution

CAUTION

Air intake tube must be fully seated on air box and throttle body.

Inspect full perimeter if serviced. Clamps at air box and throttle body must be torqued to 49 in-lbs (5.5 Nm) or severe engine damage may occur.

7182087

SAFETY
Safety Warnings

⚠ WARNING

Failure to operate this vehicle properly can result in a collision, loss of control, accident or rollover, which may result in serious injury or death. Heed all safety warnings outlined in this section of the owner’s manual and in the safety DVD provided with your vehicle. See the OPERATION section of the owner’s manual for proper operating procedures.

Operating Without Instruction

Operating this vehicle without proper instruction increases the risk of an accident. The operator must understand how to operate the vehicle properly in different situations and on different types of terrain. Take a training course and complete the New Operator Driving Procedures outlined on pages 55-56.

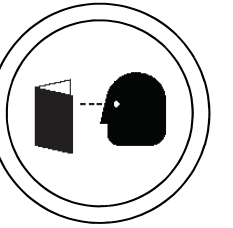

All operators must read and understand the owner's manual and all warning and instruction labels before operating the vehicle. Never allow a guest to operate this vehicle until the guest has completed the New Operator Driving Procedures outlined on pages 55-56.

Operator Restrictions/Age Restrictions

This vehicle is an ADULT VEHICLE ONLY. Operation is prohibited for anyone under 16 years of age or anyone without a valid driver’s license.

All riders must be able to sit with backs against the seat, both feet flat on the floor and both hands on the steering wheel (if driving) or on a passenger hand hold.

Using Alcohol or Drugs

Riding in this vehicle after consuming alcohol or drugs could adversely affect operator judgment, reaction time, balance and perception.

Never consume alcohol or drugs before or while operating or riding in this vehicle.

Safety Warnings

Failure to Inspect Before Operating

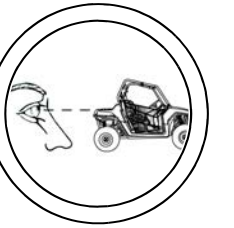

Failure to inspect and verify that the vehicle is in safe operating condition before operating increases the risk of an accident.

Always perform the pre-ride inspection before each use of your vehicle to make sure it's in safe operating condition. See page 51.

Always follow the inspection and maintenance procedures and schedules described in this owner's manual. See page 81.

Protective Apparel

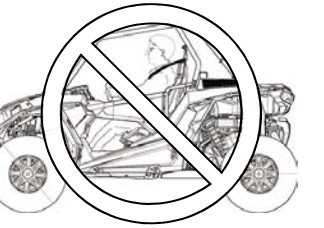

Riding in this vehicle without wearing an approved helmet and protective eyewear increases the risk of a serious injuries in the event of an accident.

Operator and all passengers must always wear a helmet, eye protection, gloves, long-sleeve shirt, long pants and over-the-ankle boots.

Seat Belts

Riding in this vehicle without wearing the seat belt increases the risk of serious injury in the event of rollover, loss of control, other accident or sudden stop. Seat belts may reduce the severity of injury in these circumstances.

All riders *must* wear seat belts at all times.

Cab Doors

Riding in this vehicle without closed and latched cab doors increases the risk of serious injury or death in the event of an accident or rollover. Always make sure all cab doors are closed and latched while riding in this vehicle. Cab doors are NOT intended to be used as arm rests. *Always keep hands and feet inside the vehicle at all times.*

SAFETY

Safety Warnings

Carrying Multiple Passengers (RZR/RZR S)

Never carry a passenger until you have operated this vehicle for at least two hours and have completed the New Operator Driving Procedures outlined on pages 55-56.

A passenger must always be seated in a passenger seat with seat belt secured. Carrying more than one passenger in a 2-seat vehicle can affect the operator's ability to steer and operate the controls, which increases the risk of loss of control and accident or rollover.

Never carry more than one passenger in a 2-seat vehicle.

Carrying Multiple Passengers (RZR 4)

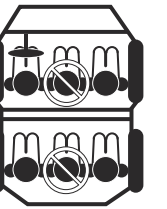

Never carry a passenger until you have operated this vehicle for at least two hours and have completed the New Operator Driving Procedures outlined on pages 55-56.

A passenger must always be seated in a passenger seat with seat belt secured.

Never carry more than three passengers in a 4-seat vehicle.

Operating With a Load on the Vehicle

The weight of both cargo and passengers impacts vehicle operation and stability. For your safety and the safety of others, carefully consider how your vehicle is loaded and how to safely operate the vehicle. Follow the instructions in this manual for loading, tire pressure, gear selection and speed.

- ***Do not exceed vehicle weight capacities.*** The vehicle's maximum weight capacity is listed in the specifications section of this manual and on a label on the vehicle. When more passenger weight is added, cargo weight may need to be reduced accordingly.
- The recommended tire pressures are listed in the specifications section of this manual and on a label on the vehicle.

Always follow these guidelines:

Under ANY of these conditions:	**Do ALL of these steps:**
Passenger and/or cargo exceeds half the maximum weight capacity	1. Slow down. 2. Verify tire pressure. 3. Use extra caution when operating.
Operating in rough terrain	
Operating over obstacles	
Climbing an incline	
Towing	

Safety Warnings

Passengers in the Cargo Box

Carrying a passenger in the cargo box could result in a fall from the vehicle or contact with moving components. Never allow a passenger to ride in the cargo box. A passenger must always be seated in a passenger seat with seat belt secured.

Operating on Pavement

This vehicle's tires are designed for off-road use only, not for use on pavement. Operating this vehicle on paved surfaces (including sidewalks, paths, parking lots and driveways) may adversely affect the handling of the vehicle and may increase the risk of loss of control and accident or rollover. Avoid operating the vehicle on pavement. If it's unavoidable, travel slowly, travel short distances and avoid sudden turns or stops.

Operating on Public Roads

Operating this vehicle on public streets, roads or highways could result in a collision with another vehicle. Never operate this vehicle on any public street, road or highway, including dirt and gravel roads (unless designated for off-highway use).

Operating at Excessive Speeds

Operating this vehicle at excessive speeds increases the operator's risk of losing control. Always operate at a speed that's appropriate for the terrain, the visibility and operating conditions, your skills and experience and your passengers' skills and experience.

SAFETY

Safety Warnings

Turning Improperly

Turning improperly could cause loss of traction, loss of control, accident or rollover. Always follow proper procedures for turning as described in this owner's manual.

Avoid sharp turns. Never turn while applying heavy throttle. Never make abrupt steering maneuvers. Practice turning at slow speeds before attempting to turn at faster speeds.

Jumps and Stunts

Exhibition driving increases the risk of an accident or rollover. DO NOT do power slides, “donuts”, jumps or other driving stunts. Avoid exhibition driving.

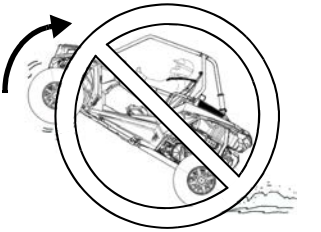

Improper Hill Climbing

Improper hill climbing could cause loss of control or rollover. Use extreme caution when operating on hills. Always follow proper procedures for hill climbing as described in this owner's manual. See page 59.

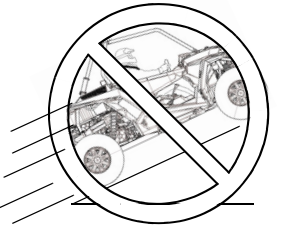

Descending Hills Improperly

Improperly descending a hill could cause loss of control or rollover. Always follow proper procedures for traveling down hills as described in this owner’s manual. See page 61.

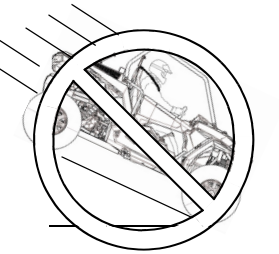

Safety Warnings

Crossing Hillsides

Driving on a sidehill is not recommended. Improper procedure could cause loss of control or rollover. Avoid crossing the side of any hill unless absolutely necessary.

If crossing a hillside is unavoidable, always follow proper procedures as described in this owner's manual. See page 60.

Stalling While Climbing a Hill

Stalling or rolling backwards while climbing a hill could cause a rollover. Maintain a steady speed when climbing a hill.

If you lose all forward speed:

Apply the brakes gradually until the vehicle is fully stopped. Place the transmission in reverse and slowly allow the vehicle to roll straight downhill while applying light brake pressure to control speed.

Operating in Unfamiliar Terrain

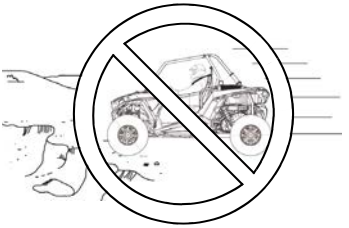

Failure to use extra caution when operating on unfamiliar terrain could result in an accident or rollover.

Unfamiliar terrain may contain hidden rocks, bumps, or holes that could cause loss of control or rollover.

Travel slowly and use extra caution when operating on unfamiliar terrain. Always be alert to changing terrain conditions.

SAFETY

Safety Warnings

Operating Improperly in Reverse

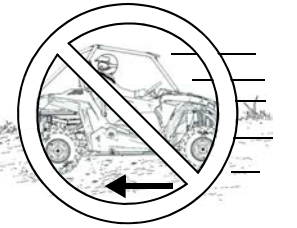

Improperly operating in reverse could result in a collision with an obstacle or person. Always follow proper operating procedures as outlined in this manual. See page 64.

Before shifting into reverse gear, always check for obstacles or people behind the vehicle. When it's safe to proceed, back slowly.

Improper Tire Maintenance

Operating this vehicle with improper tires or with improper or uneven tire pressure could cause loss of control, accident or rollover.

Always use the size and type of tires specified for your vehicle. Always maintain proper tire pressure as described in this owner's manual and on safety labels.

Skidding or Sliding

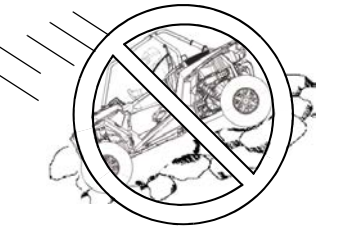

Failure to use extra caution when operating on excessively rough, slippery or loose terrain could cause loss of traction, loss of control, accident or rollover. Do not operate on excessively slippery surfaces. Always slow down and use additional caution when operating on slippery surfaces.

Skidding or sliding due to loss of traction can cause loss of control or rollover (if tires regain traction unexpectedly). Always follow proper procedures for operating on slippery surfaces as described in this owner's manual. See page 58.

Operating Over Obstacles

Improperly operating over obstacles could cause loss of control or rollover.

Before operating in a new area, check for obstacles. Never attempt to operate over large obstacles such as large rocks or fallen trees. Always follow the proper procedures outlined in this manual when operating over obstacles. See page 63.

Safety Warnings

Operating Through Water

Operating through deep or fast-flowing water can cause loss of traction, loss of control, rollover or accident. Never operate in fast-flowing water or in water that exceeds the floor level of the vehicle.

Always follow proper procedures for operating in water as described in this owner's manual. See page 62.

Wet brakes may have reduced stopping ability. After leaving water, test the brakes. Apply them lightly several times while driving slowly. The friction will help dry out the pads.

Operating on Frozen Bodies of Water

Severe injury or death can result if the vehicle and/or the operator fall through the ice. Never operate the vehicle on a frozen body of water unless you have first verified that the ice is sufficiently thick to support the weight and moving force of the vehicle, you and your passenger, and your cargo, together with any other vehicles in your party.

Always check with local authorities and residents to confirm ice conditions and thickness over your entire route. Vehicle operators assume all risk associated with ice conditions on frozen bodies of water.

Operating a Damaged Vehicle

Operating a damaged vehicle can result in an accident. After any rollover or other accident, have a qualified service dealer inspect the entire machine for possible damage, including (but not limited to) seat belts, rollover protection devices, brakes, throttle and steering systems.

SAFETY

Safety Warnings

Improper Cargo Loading

Overloading the vehicle or carrying cargo improperly may cause changes in stability and handling, which could cause loss of control or an accident.

- Always follow the instructions in this owner's manual for carrying cargo. See page 66.
- Never exceed the stated load capacity for this vehicle. See page 12.
- Cargo should be properly distributed and securely attached. See page 66.
- Reduce speed when carrying cargo. Allow a greater distance for braking.

Refueling

Gasoline is highly flammable and explosive under certain conditions.

- Always exercise extreme caution whenever handling gasoline.
- Always turn off the engine when refueling.
- Always refuel outdoors or in a well ventilated area free of any source of flame or sparks.
- Always use an approved gasoline container to store fuel and remove the container from the vehicle before filling to avoid fuel ignition due to electrical static discharge.
- Do not smoke or allow open flames or sparks in or near the area where refueling is performed or where gasoline is stored.
- Do not overfill the tank. Do not fill the tank neck.

If gasoline spills on your skin or clothing, immediately wash it off with soap and water and change clothing.

Fuel Transport Warning

NEVER carry fuel or other flammable liquids on this vehicle. Failure to follow this instruction could lead to serious burn injuries or death.

Safety Warnings

Exposure to Exhaust

Engine exhaust fumes are poisonous and can cause loss of consciousness or death in a short time. Never start the engine or let it run in an enclosed area.

Operate this vehicle only outdoors or in well-ventilated areas.

Hot Exhaust Systems

Exhaust system components are very hot during and after use of the vehicle. Hot components can cause burns and fire. Do not touch hot exhaust system components. Always keep combustible materials away from the exhaust system. Use caution when traveling through tall grass, especially dry grass, to avoid debris build-up around the exhaust system.

Unauthorized Use of the Vehicle

Leaving the keys in the ignition can lead to unauthorized use of the vehicle by someone under the age of 16, without a drivers license, or without proper training. This could result in an accident or rollover. Always remove the ignition key when the vehicle is not in use.

SAFETY

Safety Warnings

Equipment Modifications

Your POLARIS vehicle is designed to provide safe operation when used as directed. Modifications to your vehicle may negatively impact vehicle stability. Failure of critical machine components may result from operation with any modifications, especially those that increase speed or power. This vehicle may become less stable at speeds higher than those for which it is designed. Loss of control may occur at higher speeds.

Do not install any non-POLARIS-approved accessory or modify the vehicle for the purpose of increasing speed or power. Any modifications or installation of non-POLARIS-approved accessories could create a substantial safety hazard and increase the risk of bodily injury.

The POLARIS limited warranty on your POLARIS vehicle will be terminated if any non-POLARIS-approved equipment and/or modifications have been added to the vehicle that increase speed or power.

The addition of certain accessories, including (but not limited to) mowers, blades, tires, sprayers, or large racks, may change the handling characteristics of the vehicle. Use only POLARIS-approved accessories, and familiarize yourself with their function and effect on the vehicle.

FOR MORE INFORMATION ABOUT SAFETY
call POLARIS at 1-800-342-3764.

Component Locations

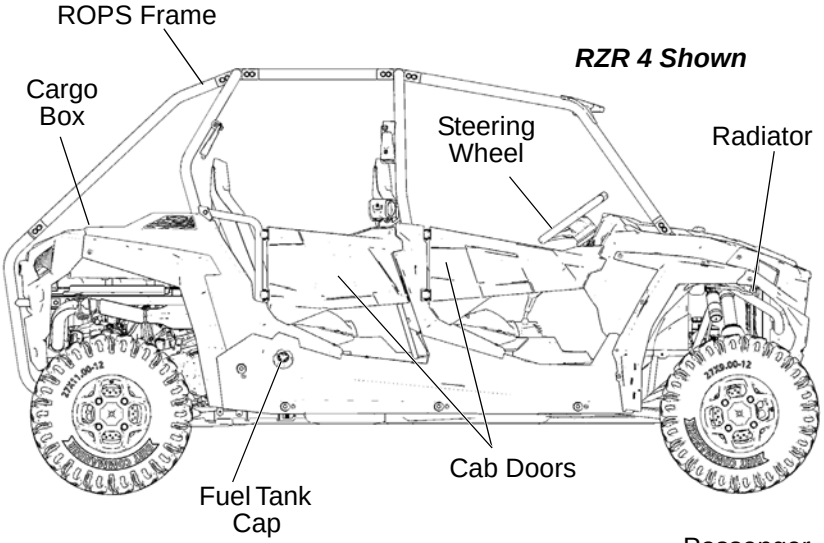

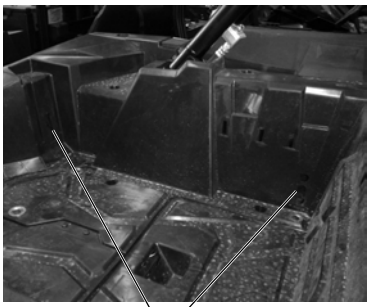

Cargo Box Tie-Down Points (4 corners)

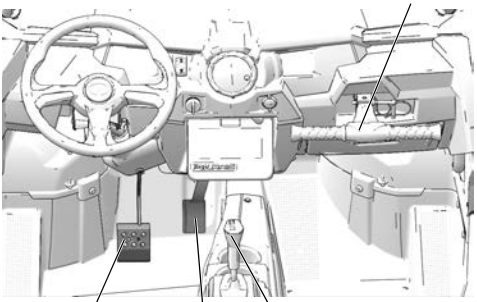

Switches

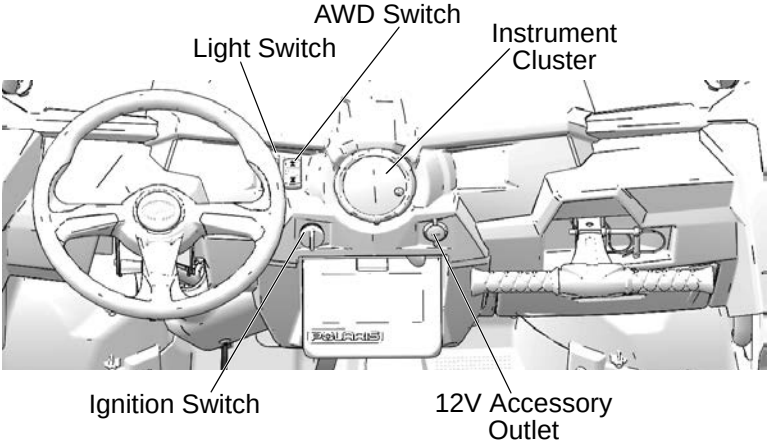

Auxiliary Outlets

The vehicle is equipped with one or more 12-volt accessory outlets. One outlet is on the dash, a second outlet (if equipped) is in the rear passenger area. Use the outlets to power an auxiliary light or other optional accessories. For service, the dash outlet connection is under the dash. The rear outlet connection is under the rear passenger seats.

Ignition Switch

The ignition switch is a four-position, key-operated switch. Use the ignition switch to start the engine. See page 53 for starting procedures.

The key can be removed from the switch when it is in the OFF position.

OFF	The engine is off. Electrical circuits are off, except accessory 12V.
ACCESSORY	The engine is off. Powers the gauge and terminal block. Check engine and power steering warning indicators will appear on the gauge in this mode, but will turn off when the vehicle is started if no issues are present.
ON	Electrical circuits are on. Electrical equipment can be used.
START	Turn the key to the START position to engage the electric starter. The key returns to the ON position when released.

Switches

Headlight Switch

Use the headlight switch to turn the lights on and off and to change the lights from high beam to low beam. The ignition switch must be in the ON position to operate the headlights.

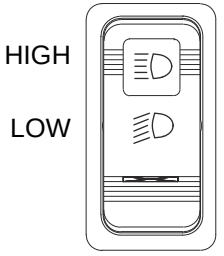

Press the top of the rocker switch toward the dash to place the headlights on high beam. Move the rocker switch to the center position to place the headlights on low beam. Press the bottom of the rocker switch to turn off the headlights.

If the headlight switch is ON when the ignition switch is turned off, the lights will remain on for approximately 30 seconds.

All Wheel Drive (AWD) Switch

The AWD Switch has either two or three positions, depending on your model's features:

- All Wheel Drive (AWD)
- Two Wheel Drive (2WD)
- Turf Mode/Differential Unlocked (1WD)

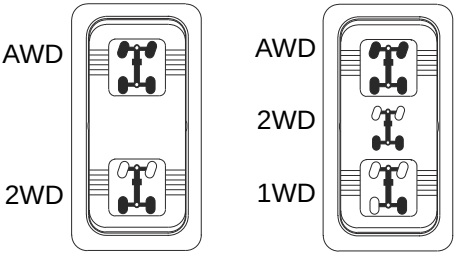

See page 38 for AWD operating instructions.

Electronic Power Steering (EPS)

Electronic power steering (if equipped) engages when the ignition key is turned to the ON position. EPS remains engaged whether the vehicle is moving or idle.

The EPS warning indicator briefly illuminates when the key is turned to the ON position. See page 41.

To conserve battery power, the EPS will shut down 5 minutes after the engine is stopped if the key remains in the ON position. The EPS warning indicator will illuminate to indicate the EPS has shut down.

If the light remains on after starting the engine, the EPS system is inoperative. Your POLARIS dealer can assist.

FEATURES AND CONTROLS

Seats

Before operating the vehicle, always push down on all seat backs to ensure the latches are secure.

Seat Adjustments

Loosen (do not remove) the four screws located on the seat bottom. Slide the seat forward or rearward to the desired position. Tighten the screws to 4 ft. lbs. (5.4 Nm). Do not overtighten.

Seat Removal

1. Pull up on the seat latch lever located under the rear edge of the seat.
2. Tilt the seat forward.
3. Lift the seat upward to remove it from the vehicle.
4. Reverse this procedure to reinstall the seat. Make sure the seat tabs at the front edge of the seat slide under the seat retainer bar.
5. Press down firmly at the rear of the seat to engage the rear latch.

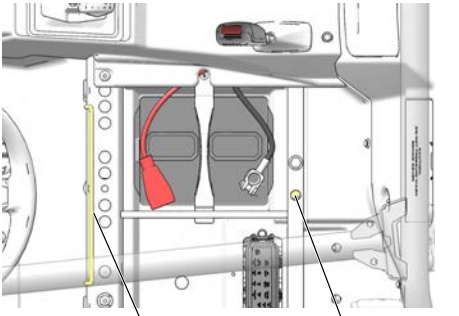

Steering Wheel

The steering wheel can be tilted upward or downward for rider preference.

Lift and hold the steering wheel adjustment lever while moving the steering wheel upward or downward. Release the lever when the steering wheel is at the desired position.

Passenger Hand Hold

Always adjust the hand hold to a comfortable position for your passenger before operating. Make sure the adjustment pin and retainer are securely installed after making adjustments.

1. Remove the retainer from the end of the adjustment pin.
2. Remove the pin from the post.
3. Slide the post inward or outward to the desired position.
4. Reinstall the pin through the post mounting hole, adapter bushing hole, both post adjustment holes and lastly through the remaining bushing hole and post mounting hole.
5. Reinstall the retainer to the pin.

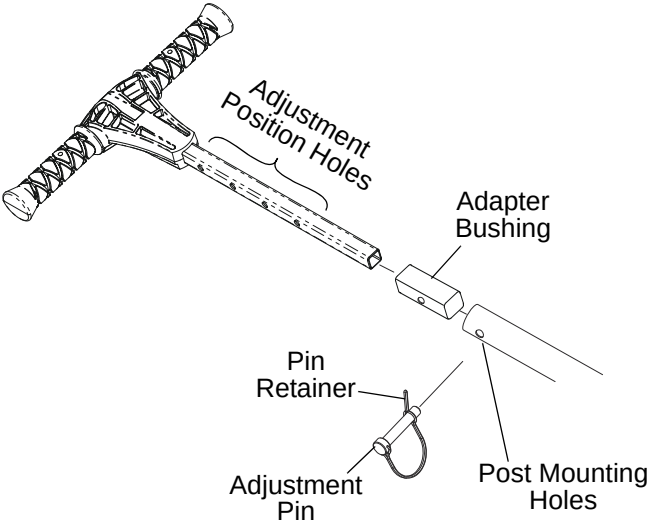

Hood

Remove the hood to access the radiator pressure cap and coolant overflow bottle.

1. Turn the hood fasteners 1/4 turn.
2. Grasp the upper hood edge and pull upward to disengage the fasteners.
3. Pivot the hood forward and lift upward to disengage the lower hood hooks.
4. Lift the hood away from the vehicle.

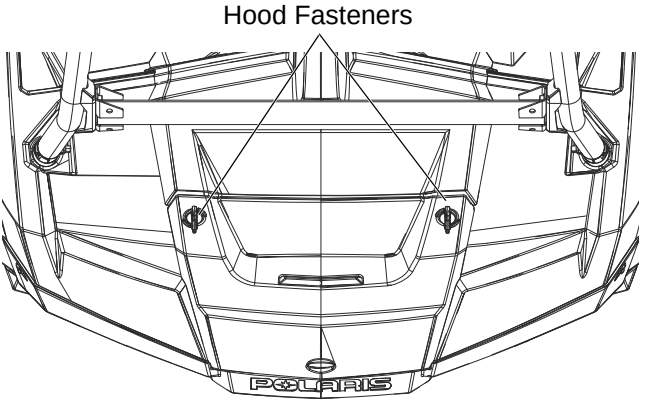

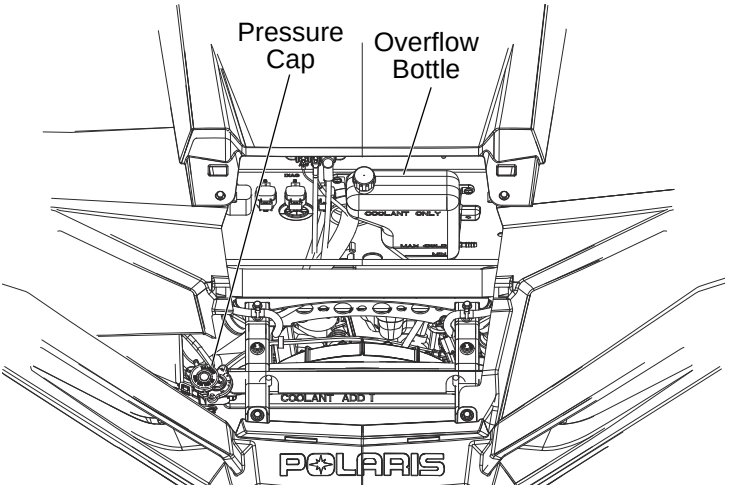

Fuel Cap

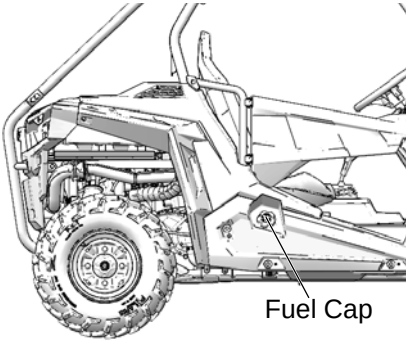

The fuel tank filler cap is located on the right-hand side of the vehicle near the passenger seat. When refueling, always use either leaded or unleaded gasoline with a minimum pump octane number of 87 R+M/2 octane. *Do not use fuel with ethanol content greater than 10 percent, such as E-85 fuel.*

Trailer Hitch Bracket

This vehicle is equipped with a receiver hitch bracket for a trailer hitch. To avoid injury and property damage, always heed the warnings and towing capacities outlined on pages 66-68.

Service Access Panels

Engine Access Panel

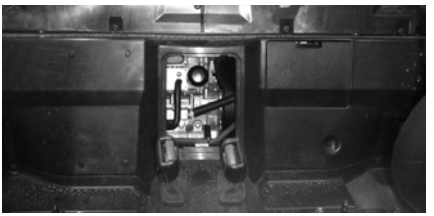

The engine access panel is located behind the seats on the frame of the vehicle. Remove the seats and remove the access panel to reach serviceable engine components.

Cargo Box Access Panel

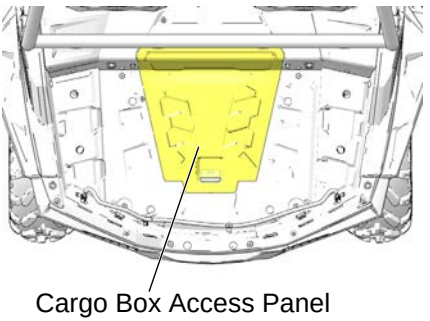

The cargo box access panel is located on the floor of the cargo box. Remove the panel to access the engine oil fill cap, spark plugs and air filter.

FEATURES AND CONTROLS

Seat Belts

This POLARIS vehicle is equipped with seat belts for all riders. Always make sure the seat belts are secured for the operator and passenger before riding. The driver's seat belt is equipped with a seat belt interlock. Vehicle speed will be limited to 15 MPH (24 km/h) if the seat belt is not secured.

3-Point Seat Belt

To wear the 3-point seat belt properly, follow this procedure:

1. Pull the seat belt latch downward and across your chest toward the buckle at the inner edge of the seat. The belt should fit snugly across your hips and diagonally across your chest. Make sure the belt is not twisted.
2. Push the latch plate into the buckle until it clicks. Pull up on the strap to tighten.
3. Press the red release latch on the buckle to release the seat belt.

Seat Belt Height Adjuster (if equipped)

A breakthrough in comfort, the seat belt height adjuster reduces neck rub and works as a shock absorber for your shoulder. The height adjuster consists of an adjuster (1) and a rail (2). (3) designates the adjustment zone.

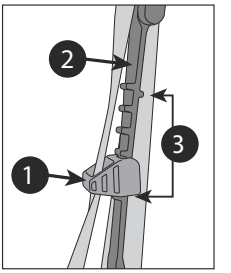

HOW TO ADJUST THE HEIGHT OF YOUR SEAT BELT FOR DESIRED COMFORT AND PROPER FIT

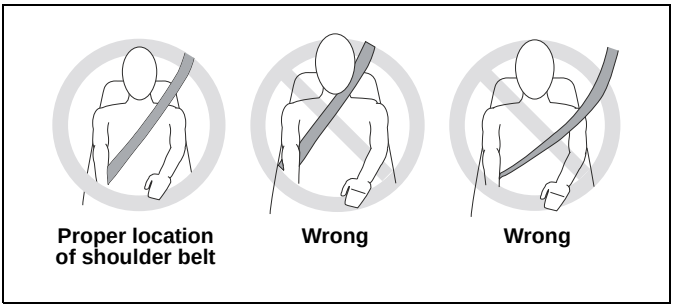

continued on next page

Seat Belts

Seat Belt Height Adjuster (if equipped)

STEP 1

Stretch the seat belt height adjuster toward the front of the vehicle.

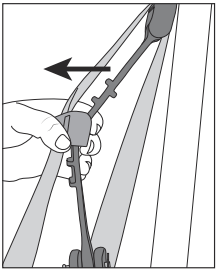

STEP 1

STEP 2

While continuing to stretch the seat belt height adjuster, slide the adjuster up or down, rocking it side to side if necessary, until you reach the desired height. This may require both hands. Do not attempt to adjust while vehicle is in motion.

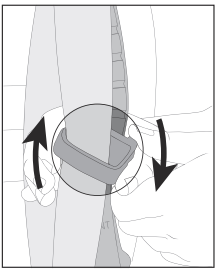

STEP 2

NOTE: Adjustment becomes easier with repeated use.

CLEANING INSTRUCTIONS: The seat belt height adjuster can be cleaned with water.

Seat Belts

Seat Belt Inspection

Inspect all seat belts for proper operation before each use of the vehicle.

1. Push the latch plate into the buckle until it clicks. The latch plate must slide smoothly into the buckle. A click indicates that it's securely latched.
2. Push the red release latch in the middle of the buckle to make sure it releases freely.
3. Pull each seat belt completely out and inspect the full length for any damage, including cuts, wear, fraying or stiffness. If any damage is found, or if the seat belt does not operate properly, have the seat belt system checked and/or replaced by an authorized POLARIS dealer.

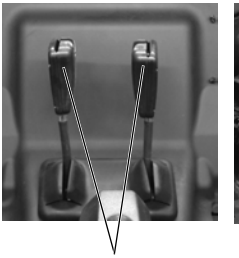

4. To clean dirt or debris from the seat belts, sponge the straps with mild soap and water. Do not use bleach, dye or household detergents. Rinse the entire length of the belt webbing. Use a garden hose to flush out the retractor and latch housings regularly.

Cab Doors

This vehicle is equipped with cab doors. Riding in this vehicle without closed and latched cab doors increases the risk of serious injury or death in the event of an accident or rollover. Always make sure all cab doors are closed and latched when riding in this vehicle.

Always inspect doors and latches for wear and damage before each use of the vehicle.

Promptly replace any worn or damaged parts with new parts available from your authorized POLARIS dealer.

Gear Selector

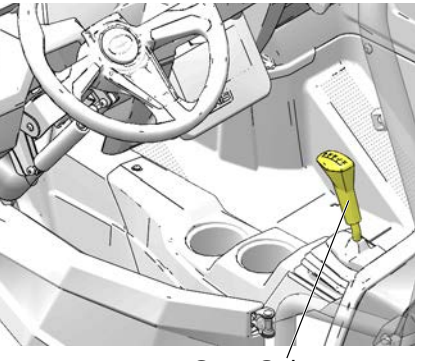

P: Park

R: Reverse

N: Neutral

L: Low Gear

H: High Gear

To change gears, stop the vehicle, and with the engine idling, move the lever to the desired gear. Do not attempt to shift gears with engine speed above idle or while the vehicle is moving.

Tip: Maintaining shift linkage adjustment is important to assure proper transmission function. Your POLARIS dealer can assist in resolving any shifting problems.

NOTICE: Do not attempt to shift the transmission while the vehicle is moving or damage to the transmission could result. Always shift when the vehicle is stationary and the engine is at idle.

Using Low Range

Always shift into low gear for any of the following conditions.

- Operating in rough terrain or over obstacles
- Loading the vehicle onto a trailer
- Towing heavy loads

Brake Pedal

Depress the brake pedal to slow or stop the vehicle. Apply the brakes while starting the engine.

Throttle Pedal

Push the pedal down to increase engine speed. Spring pressure returns the pedal to the rest position when released. Always check that the throttle pedal returns normally before starting the engine.

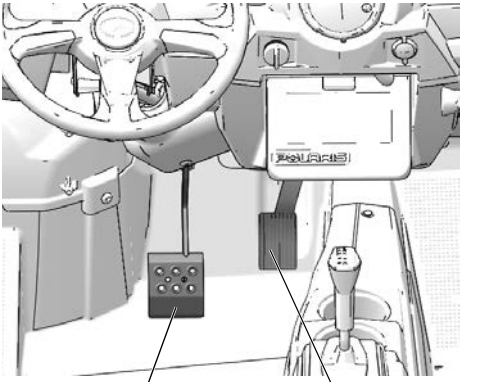

Tip: If the throttle pedal and brake pedal are applied simultaneously, engine power may be limited.

Rollover Protective Structure (ROPS)

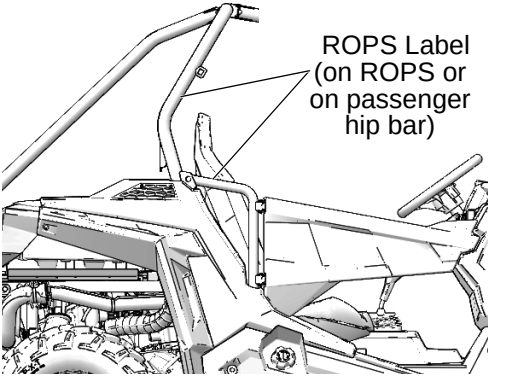

The Rollover Protective Structure (ROPS) on this vehicle meets OSHA 1928.53 rollover performance requirements. Always have your authorized POLARIS dealer thoroughly inspect the ROPS if it ever becomes damaged in any way.

No device can assure occupant protection in the event of a rollover. When used with seat belts and cab nets or doors, the ROPS helps prevent occupants from being ejected from the vehicle. Always follow all safe operating practices outlined in this manual to avoid vehicle rollover.

WARNING! Vehicle rollover could cause severe injury or death. Always avoid operating in a manner that could result in vehicle rollover.

FEATURES AND CONTROLS
All Wheel Drive (AWD) System

The All Wheel Drive system is controlled by the AWD switch. The switch has two positions, AWD (4x4) and 2WD (2x4). The switch on models equipped with a lockable differential has a third position for unlocking the differential. When unlocked, only one rear wheel is a drive wheel. See page 39.

When the switch is on 2X4, the vehicle is in two-wheel drive at all times. When the switch is on AWD, the vehicle is in all wheel drive and the 4X4 indicator in the instrument cluster will be on.

When in AWD, the demand drive unit will automatically engage any time the rear wheels lose traction. When the rear wheels regain traction, the demand drive unit will automatically disengage.

There is no limit to the length of time the vehicle may remain in AWD.

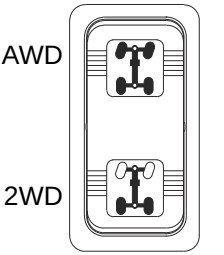

AWD Switch

Engaging AWD

The AWD switch may be turned on or off while the vehicle is moving. Initially, the vehicle's electronic system will not enable the AWD until the engine RPM is below 3100. Once enabled, the AWD remains enabled until the AWD switch is turned off. If the switch is turned off while the demand drive unit is moving, it will not disengage until the rear wheels regain traction.

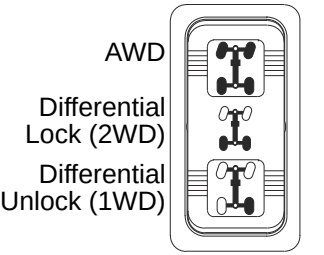

AWD Switch (models with a lockable differential)

Engage the AWD switch before getting into conditions where front wheel drive may be needed. If the rear wheels are spinning, release the throttle before switching to AWD.

NOTICE: Switching to AWD while the rear wheels are spinning or slipping may cause severe drive shaft and gearcase damage. Always switch to AWD while the rear wheels have traction or are at rest.

All Wheel Drive (AWD) System

Disengaging AWD

Move the AWD switch to the center or bottom position to disengage AWD. If the switch is turned off while the front hubs are driving, they will not release until the rear wheels regain traction.

In some situations, the front gearcase may remain locked after turning the AWD switch off. If this occurs, you may notice increased steering effort and some vehicle speed restriction. Perform the following procedure to unlock the front gearcase.

1. Stop the vehicle.
2. Operate in reverse for at least 10 feet (3 m).
3. Stop completely.
4. Shift into low gear and drive forward.
5. If the front gearcase remains locked after following these instructions, see your dealer for service.

Locking/Unlocking the Differential (if equipped)

NOTICE: Damage to the differential can occur if it is engaged while the vehicle is traveling at high speeds or while the rear wheels are spinning. Slow the vehicle to nearly stopped before engaging the differential.

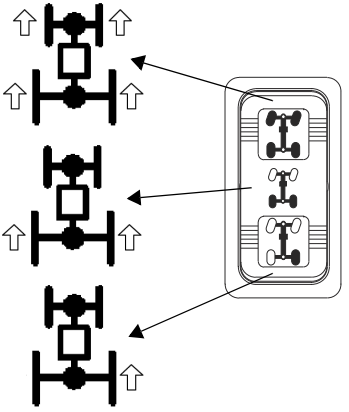

Locking the differential in slippery or low traction conditions helps improve traction. Move the rocker switch to the center position (2WD) to lock the differential and operate in rear wheel drive.

Press the bottom of the switch to unlock the differential and allow the rear drive wheels to operate independently. This mode of operation is well suited to turf driving or whenever aggressive traction is not required.

FEATURES AND CONTROLS

Instrument Cluster

NOTICE: High water pressure may damage components. Wash the vehicle by hand or with a garden hose using mild soap.

Certain products, including insect repellents and chemicals, will damage the speedometer lens and other plastic surfaces. Do not use alcohol to clean the instrument cluster. Do not allow insect sprays to contact the lens. Immediately clean off any gasoline that splashes on the instrument cluster.

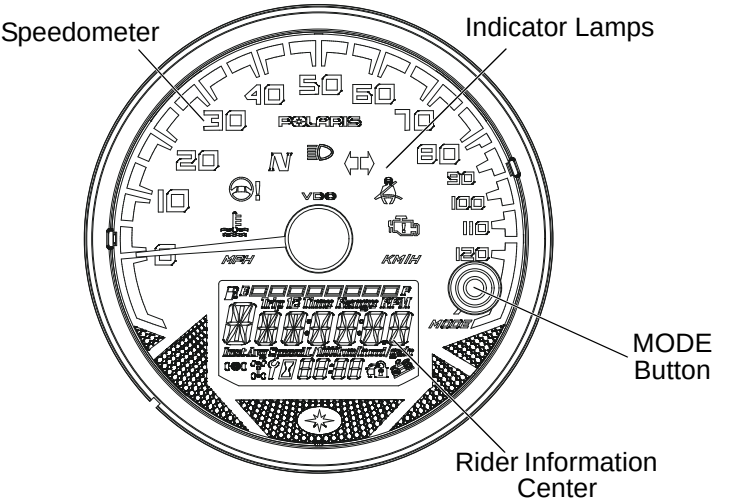

Speedometer

The speedometer displays vehicle speed in either miles per hour (MPH) or kilometers per hour (km/h). See page 44.

Mode Button

Use the MODE button to toggle through mode options. See page 44 for operation of the modes.

Instrument Cluster

Indicator Lamps

Lamp	Indicates	Condition
MPH	Vehicle Speed	When standard mode is selected, speed displays in miles per hour.
KM/H		When metric mode is selected, speed displays in kilometers per hour.
	Over Temperature	This lamp illuminates to indicate an overheated engine. If the indicator flashes, the overheating condition remains, and the system will automatically reduce engine power.
	EPS Warning	This indicator illuminates briefly when the key is turned to the ON position. If the light remains on, the EPS system is inoperative. Your POLARIS dealer can assist.
N	Neutral	This lamp illuminates when the transmission is in neutral and the ignition key is in the ON position.
	High Beam	This lamp illuminates when the headlamp switch is set to high beam.
	Helmet/Seat Belt	The lamp is a reminder to the operator to ensure all riders are wearing helmets and seat belts before operating. The driver's seat belt is equipped with a seat belt interlock. Vehicle speed will be limited to 15 MPH (24 km/h) if the seat belt is not secured.
	Check Engine	This indicator appears if an EFI-related fault occurs. Do not operate the vehicle if this warning appears. Serious engine damage could result. Your POLARIS dealer can assist.

FEATURES AND CONTROLS

Instrument Cluster

Rider Information Center

The rider information center is located in the instrument cluster. All segments will light up for one second at start-up. If the instrument cluster fails to illuminate, a battery over-voltage may have occurred and the instrument cluster may have shut off to protect the electronic speedometer. If this occurs, your POLARIS dealer can provide proper diagnosis.

The information center is set to display standard units of measurement and a 12-hour clock at the factory. To change to metric and/or a 24-hour clock, see page 45.

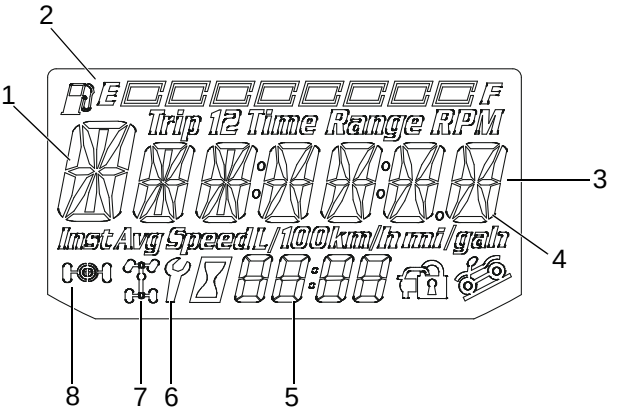

Instrument Cluster

Rider Information Center

1. **Gear Indicator -** This indicator displays gear shifter position.
   H = High Gear
   L = Low Gear
   N = Neutral
   R = Reverse Gear
   P = Park
   -- = Gear Signal Error (or shifter between gears)
2. **Fuel Gauge -** The segments of the fuel gauge show the level of fuel in the fuel tank. When the last segment clears, a low fuel warning is activated. All segments including the fuel icon will flash. Refuel immediately.

Tip: If the fuel icon fails to display, an open or short circuit has occurred in the fuel sensor circuit. Your POLARIS dealer can assist.

3. **Information Display Area -** This area displays odometer, trip meter, engine hour meter and programmable service hour interval.
4. **Under / Over Voltage -** This warning usually indicates that the vehicle is operating at an RPM too low to keep the battery charged. It may also occur when the engine is at idle and high electrical load (lights, cooling fan, accessories) is applied. Drive at a higher RPM or recharge the battery to clear the warning.
5. **Clock -** The clock displays time in a 12-hour or 24-hour format. See page 45 for resetting instructions.
6. **Service Indicator -** A flashing wrench symbol alerts the operator that the preset service interval has been reached. Your POLARIS dealer can provide scheduled maintenance. See page 45 for resetting instructions.
7. **4X4 Indicator -** This indicator illuminates when the 4X4 system is engaged (switch is on 4X4).
8. **Turf Mode Indicator -** This indicator illuminates when the operator unlocks the differential. See page 39.

FEATURES AND CONTROLS

Instrument Cluster

Rider Information Center

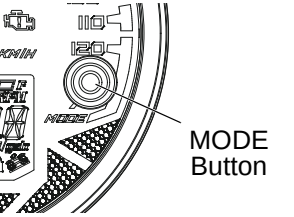

Use the MODE button to toggle through the information area options.

Display Units (Standard/Metric)

The display can be changed to show either standard or metric units of measurement for each of the following settings.

Tip: To exit the set-up mode, turn the key off. Wait 5 seconds, then turn the key on. The gauge display the mode that was displayed prior to setting the units.

	Standard Display	Metric Display
Distance	Miles	Kilometers
Fuel	U.S. Gallons	Liters, Imperial Gallons
Temperature	Fahrenheit	Celsius
Time	12-Hour Clock	24-Hour Clock

1. Turn the key to the OFF position.
2. Press and *hold* the MODE button while turning the key to the ON position.
3. When the display flashes the distance setting, tap the MODE button to advance to the desired setting.
4. Press and *hold* the MODE button to save the setting and advance to the next display option.
5. Repeat the procedure to change remaining display settings.

Instrument Cluster

Rider Information Center

Clock Mode

Tip: The clock must be reset any time the battery has been disconnected or discharged.

1. Turn the key to the ON position. Use the MODE button to toggle to the odometer display.
2. Press and *hold* the MODE button until the hour segment flashes. Release the button.
3. With the segment flashing, tap the MODE button to advance to the desired setting.
4. Press and *hold* the MODE button until the next segment flashes. Release the button.
5. Repeat steps 3-4 twice to set the 10-minute and 1-minute segments. After completing the 1-minute segment, step 4 will save the new settings and exit the clock mode.
6. Turn the key to the OFF position.

Odometer Mode

The odometer records and displays the distance traveled by the vehicle.

Trip Meter Mode

The trip meter records the distance traveled by the vehicle if reset before each trip. To reset, select the trip meter mode. Press and hold the MODE button until the meter resets to zero. In the Rider Information Center, the trip meter display contains a decimal point, but the odometer displays without a decimal point.

Hour Meter Mode

This mode logs the total hours the engine has been in operation.

Engine Temperature Mode

This mode displays current temperature of the coolant.

Battery Voltage Mode

This mode displays current system voltage level.

Tachometer Mode

The engine RPM is displayed digitally.

Tip: Small fluctuations in the RPM from day to day may be normal because of changes in humidity, temperature and elevation.

Instrument Cluster

Rider Information Center

Programmable Service Interval

When the hours of engine operation equal the programmed service interval setting, the wrench icon will flash for 5 seconds each time the engine is started. When this feature is enabled, it provides a convenient reminder to perform routine maintenance. The service interval is programmed at 50 hours at the factory. Use the following procedure to change the service interval.

1. Press the MODE button until remaining service hours display.
2. Press and hold the MODE button.
3. When the service hours flash, press and release the MODE button to advance the hours to the desired setting (including OFF). Press and hold the MODE button to set the new service hour interval.

Diagnostic Display Mode

The EFI diagnostic display mode is for informational purposes only. Your POLARIS dealer can provide for all major repairs.

The diagnostic mode is accessible only when the check engine warning indicator activates after the key has been turned on. Leave the key on if you want to view the active code (failure code).

The diagnostic mode becomes inaccessible if the key is turned off and on and the warning indicator is no longer active. This allows the determination of persistent as well as intermittent faults.

Inactive codes are stored in the history of the unit.

FEATURES AND CONTROLS
Instrument Cluster
Rider Information Center
Engine Error Codes

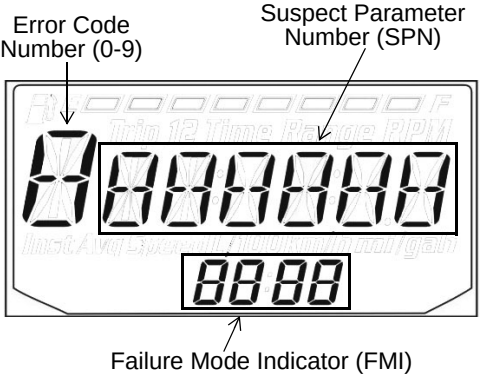

The error screen displays only when the CHECK ENGINE light is on or when it goes on and off during one ignition cycle. Error codes are not stored. When the key is turned OFF, the code and message is lost, but will reappear if the fault reoccurs after restarting the engine.

If the CHECK ENGINE light illuminates, retrieve the error codes from the display.

1. If the error codes are not displayed, use the MODE button to toggle until “Ck ENG” displays on the main line of the display.
2. Press and hold the MODE button to enter the diagnostics code menu.
3. Record the three numbers displayed in the gear position, clock and odometer displays.
4. Press the MODE button to advance to the next error code.
5. Press and hold the MODE button to exit the diagnostics code menu.
6. Your authorized POLARIS dealer can provide code details and diagnosis.

⚠ WARNING

Failure to operate the vehicle properly can result in a collision, loss of control, accident or rollover, which may result in serious injury or death. Read and understand all safety warnings outlined in the safety section of this owner's manual.

Vehicle Break-in Period

The break-in period for your new POLARIS vehicle is the first 25 hours of operation, or the time it takes to use the first two tanks full of gasoline. Clutch and drive belt break-in periods vary depending on operating conditions. See page 50.

No single action on your part is as important as a proper break-in period. Careful treatment of a new engine and drive components will result in more efficient performance and longer life for these components. Perform the following procedures carefully.

NOTICE: Excessive heat build-up during the first three hours of operation will damage close-fitted engine parts and drive components. Do not operate at full throttle or high speeds during the first three hours of use.

Use of any improper oils may cause serious engine damage. POLARIS Premium 4 Synthetic Oil is specifically formulated for your 4-cycle engine.

Engine and Drivetrain Break-in

1. Fill the fuel tank with gasoline. See page 31. Always exercise extreme caution whenever handling gasoline.
2. Check the oil level. See page 91. Add the recommended oil as needed to maintain the oil level in the safe operating range.
3. Complete the New Operator Driving Procedures outlined on pages 55-56.
4. Avoid aggressive use of the brakes. See Brake System Break-in on page 50.
5. Vary throttle positions. Do not operate at sustained idle.
6. Perform regular checks on fluid levels, controls and areas outlined on the daily pre-ride inspection checklist. See page 51.

Vehicle Break-in Period

Engine and Drivetrain Break-in

7. Carry only light loads.
8. During the break-in period, change both the oil and the filter at 25 hours or one month.
9. Check fluid levels of transmission and all gearcases after the first 25 hours of operation and every 100 hours thereafter.

Brake System Break-in

Apply only moderate braking force for the first 50 stops. Aggressive or overly forceful braking when the brake system is new could damage brake pads and rotors.

PVT Break-in (Clutches/Belt)

A proper break-in of the clutches and drive belt will ensure a longer life and better performance. If a belt fails, always clean any debris from the duct and from the engine compartment.

Standard Break-In

Drive at slower speeds for the first 50 miles (80 km) of operation. Carry only light loads. Avoid aggressive acceleration, high-speed operation and prolonged operation at a specific RPM during this period.

Sand/Dune Break-In

Drive in low gear for the first 5 miles (8 km) of operation. Avoid prolonged low speed operation at high throttle. Avoid aggressive acceleration, high-speed operation and prolonged operation at a specific RPM during this period.

Pre-Ride Inspection

Failure to inspect and verify that the vehicle is in safe operating condition before operating increases the risk of an accident. Always inspect the vehicle before each use to make sure it's in safe operating condition.

Item	Remarks	Page
Brake system/pedal travel	Ensure proper operation	36 110
Brake fluid	Ensure proper level	112
Front suspension	Inspect, lubricate if necessary	88
Rear suspension	Inspect, lubricate if necessary	88
Steering	Ensure free operation	123
Tires	Inspect condition and pressure	12 118
Wheels/fasteners	Inspect, ensure fastener tightness	118
Frame nuts, bolts, fasteners	Inspect, ensure tightness	-
Fuel and oil	Ensure proper levels	43 91
Coolant level	Ensure proper level	103- 104
Coolant hoses	Inspect for leaks	-
Throttle	Ensure proper operation	-
Indicator lights/switches	Ensure proper operation	26-27
PVT intake	Inspect, clean	-
Headlights	Check operation	-
Brake light/taillight	Check operation	-
Seat Latches	Push down on both seat backs to ensure the latches are secure	28
Seat Belts	Check length of belt for damage, check latches for proper operation	32
Cab Doors	Check doors and latches for wear or damage.	35

OPERATION
Safe Operation Practices

1. Visit the Recreational Off-Highway Vehicle Association web site (rohva.org) and take the free on-line training course. Complete the New Operator Driving Procedures outlined on pages 55-56.
2. Do not allow anyone under 16 years of age or without a valid driver's license to operate this vehicle.
3. Never carry more than one passenger in a 2-seat vehicle. Never carry more than three passengers in a 4-seat vehicle. Never allow a passenger to ride in the cargo box.
4. Engine exhaust fumes are poisonous. Never start the engine or let it run in an enclosed area.
5. Never operate with accessories not approved by POLARIS for use on this vehicle.
6. Operate this vehicle off-road only. Never operate the vehicle on pavement or on any public street, road or highway, including dirt and gravel roads.
7. Drive in a manner appropriate for your skills and operating conditions. Never operate at excessive speeds. Never attempt wheelies, jumps, or other stunts. Keep both hands on the steering wheel during operation.
8. Never consume alcohol or drugs before or while operating this vehicle.
9. Always use the size and type of tires specified for your vehicle. Always maintain proper tire pressure.
10. Never operate a damaged vehicle. After any rollover or accident, have a qualified service dealer inspect the entire machine for possible damage.
11. Never operate the vehicle on a frozen body of water unless you have first verified that the ice is sufficiently thick to support the weight and moving force of the vehicle, you and your passenger, and your cargo, together with any other vehicles in your party.
12. Do not touch hot exhaust system components. Always keep combustible materials away from the exhaust system.
13. Always remove the ignition key when the vehicle is not in use to prevent unauthorized use.

Starting the Engine

1. Position the vehicle on a level surface outdoors or in a well-ventilated area.
2. Sit in the driver's seat and fasten the seat belt. Always make sure all cab doors are closed and latched when riding in this vehicle.
3. Place the transmission in PARK.
4. Apply the brakes. Do not press the throttle pedal while starting the engine.
5. Turn the ignition key past the ON/RUN position to START. Engage the starter for a maximum of five seconds. Release the key when the engine starts.
6. If the engine does not start within five seconds, return the ignition switch to the OFF position and wait five seconds. Repeat steps 5 and 6 until the engine starts.
7. Vary the engine RPM slightly with the throttle to aid in warm up until the engine idles smoothly.

NOTICE: Operating the vehicle immediately after starting could cause engine damage. Allow the engine to warm up for several minutes before operating the vehicle.

Stopping the Engine

1. Release the throttle pedal completely and brake to a complete stop.
2. Place the transmission in PARK.
3. Turn the engine off.
4. Slowly release the brake pedal and make sure the transmission is in PARK before exiting the vehicle.

Braking

1. Release the throttle pedal completely.

Tip: When the throttle pedal is released completely and engine speed slows to near idle, the vehicle has no engine braking.

2. Press on the brake pedal evenly and firmly.
3. Practice starting and stopping (using the brakes) until you're familiar with the controls.

OPERATION

Parking the Vehicle

1. Stop the vehicle on a level surface. When parking inside a garage or other structure, be sure that the structure is well ventilated and that the vehicle is not close to any source of flame or sparks, including any appliance with pilot lights.
2. Place the transmission in PARK.
3. Turn the engine off.
4. Slowly release the brake pedal and make sure the transmission is in PARK before exiting the vehicle.
5. Remove the ignition key to prevent unauthorized use.

Know Your Riding Area/Tread Lightly

Familiarize yourself with all laws and regulations concerning the operation of this vehicle in your area. Respect the environment in which you ride your vehicle. Find out where the designated riding areas are by contacting your POLARIS dealer, a local riding club, or local officials.

Help keep our trails open for recreational vehicle use. As an off-road enthusiast, you represent the sport and can set a good example (or a poor example) for others to follow. Tread lightly. Operate with respect for the terrain, avoid littering, and always stay on the designated trails.

Trail Etiquette

Always practice good etiquette when riding. Allow a safe distance between your vehicle and other vehicles operating in the same area. Communicate to oncoming operators by signaling the number of vehicles in your group. When stopping, move your vehicle to the edge of the trail as far as possible to allow others to pass safely.

New Operator Driving Procedures

1. Read and understand the owner's manual and all warning and instruction labels before operating this vehicle.
2. Visit the Recreational Off-Highway Vehicle Association web site (rohva.org) and take the free on-line training course. Hands-on training is also available through ROHVA.
3. Perform the pre-ride inspection. See page 51.
4. Do not carry a passenger until you have at least two hours of driving experience with this vehicle.
5. Do not carry cargo during this period.
6. Select an open area that allows room to familiarize yourself with vehicle operation and handling.
7. The driver and passenger must wear helmet, eye protection, gloves, long-sleeve shirt, long pants, over-the-ankle boots and seat belt at all times.
8. Always make sure all cab doors are closed and latched when riding in this vehicle.
9. Sit in the driver's seat and fasten the seat belt.
10. Place the transmission in PARK.
11. Start the engine.

New Operator Driving Procedures

12. Apply the brakes and shift into low gear.
13. Check your surroundings and determine your path of travel.
14. Keeping both hands on the steering wheel, slowly release the brakes and depress the throttle with your right foot to begin driving.
15. Drive slowly at first. On level surfaces, practice starting, stopping, turning, maneuvering, using the throttle and brakes and driving in reverse. Learn how the vehicle handles when making both left and right turns at a slow speed.
16. Increase speed only after mastering all maneuvers at a slow speed.
17. After you become skilled at making turns and begin to operate at faster speeds, follow these precautions:
    - Avoid sharp turns.
    - Never turn while applying heavy throttle.
    - Never make abrupt steering maneuvers.
    - Operate at speeds appropriate for your skills, the conditions and the terrain.
    - DO NOT do power slides, “donuts”, jumps or other driving stunts.

Driving with Passengers

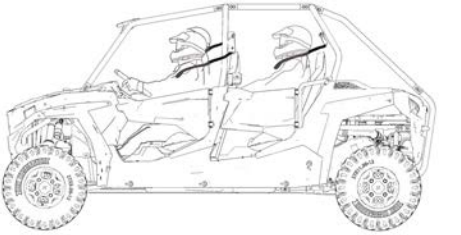

1. Complete the New Operator Driving Procedures outlined on pages 55-56.
2. Perform the pre-ride inspection. See page 51.
3. Do not carry a passenger until you have at least two hours of driving experience with this vehicle.
4. Do not carry more than one passenger in a 2-seat vehicle. Do not carry more than three passengers in a 4-seat vehicle. Additional passengers can affect the operator's ability to steer and operate the controls.
5. All riders must be able to sit with backs against the seat, both feet flat on the floor and both hands on the steering wheel (if driving) or on a passenger hand hold.
6. The driver and all passengers must wear helmet, eye protection, gloves, long-sleeve shirt, long pants, over-the-ankle boots and seat belt at all times. See page 8.
7. Always make sure all cab doors are closed and latched when riding in this vehicle.
8. Allow a passenger to ride only in a passenger seat.
9. Slow down. Always travel at a speed appropriate for your skills, your passenger's skills and operating conditions. Avoid unexpected or aggressive maneuvers that could cause discomfort or injury to a passenger.
10. Vehicle handling may change with a passenger and/or cargo on board. Allow more time and distance for braking.
11. Always follow all operating guidelines as outlined on safety labels and in this manual.

OPERATION
Driving on Slippery Surfaces

When driving on slippery surfaces such as wet trails, loose gravel, or ice, be alert for the possibility of skidding and sliding.

Follow these precautions when encountering slippery conditions:

1. Slow down before entering slippery areas.
2. Maintain a high level of alertness, reading the trail and avoiding quick, sharp turns, which can cause skids.
3. Engage all-wheel drive before wheels begin to lose traction.

NOTICE: Severe damage to the drive train may occur if the AWD is engaged while the wheels are spinning. Always allow the wheels to stop spinning before engaging AWD.

4. Correct a skid by turning the steering wheel in the direction of the skid. *Never apply the brakes during a skid.*

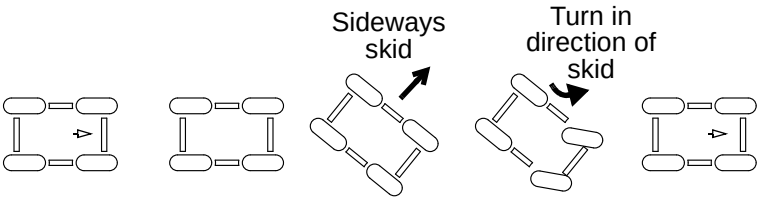

Driving Uphill

Whenever traveling uphill, follow these precautions:

1. Always check the terrain carefully before ascending a hill. Never drive on hills with excessively slippery or loose surfaces.
2. Avoid excessively steep hills. If ascending a steeper grade is unavoidable, shift to low gear and engage all-wheel drive before ascending.
3. Drive straight uphill.
4. Proceed at a steady rate of speed and throttle opening. Never open the throttle suddenly.
5. Avoid unnecessary changes in speed or direction.
6. Never go over the crest of a hill at high speed. An obstacle, a sharp drop, or another vehicle or person could be on the other side of the hill.
7. If the vehicle stalls while climbing a hill, apply the brakes. Place the transmission in reverse and slowly allow the vehicle to roll straight downhill while applying light brake pressure to control speed.

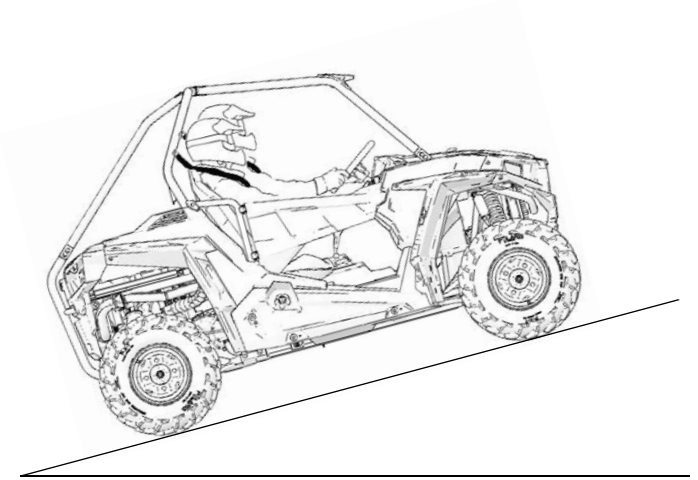

Driving on a Sidehill (Sidehilling)

Driving on a sidehill is not recommended. Improper procedure could cause loss of control or rollover. Avoid crossing the side of any hill unless absolutely necessary.

If crossing a hill is *unavoidable*, follow these precautions:

1. Engage all-wheel drive.
2. Drive slowly and use extreme caution.
3. If the vehicle begins to roll over, or if it feels as if it may roll over, *immediately* turn downhill.
4. Avoid obstacles and changes in terrain that may lower or raise one side of the vehicle or cause the vehicle to slide.
5. If the vehicle begins to slide downhill, immediately turn downhill to stop the slide, or stop the vehicle and maneuver slowly and carefully until the vehicle can be driven straight downhill.

Driving Downhill

Whenever descending a hill, follow these precautions:

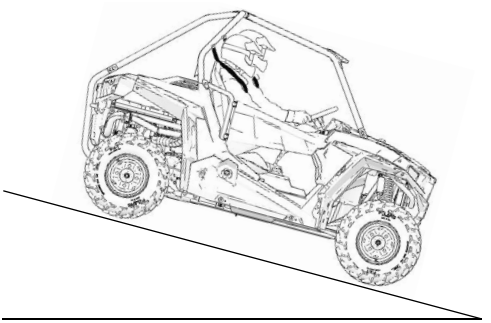

1. Avoid excessively steep hills.
2. Slow down. Never travel down a hill at high speed.
3. Always check the terrain carefully before descending a hill. Never drive on hills with excessively slippery or loose surfaces.
4. Always descend a hill with the transmission in forward gear. *Never descend a hill with the transmission in neutral*.
5. Avoid traveling down a hill at an angle, which would cause the vehicle to lean sharply to one side. Travel straight downhill.
6. Apply the brakes *lightly* to aid in slowing.

OPERATION
Driving Through Water

Your vehicle can operate through water with a maximum recommended depth equal to floor level. Follow these precautions when operating through water:

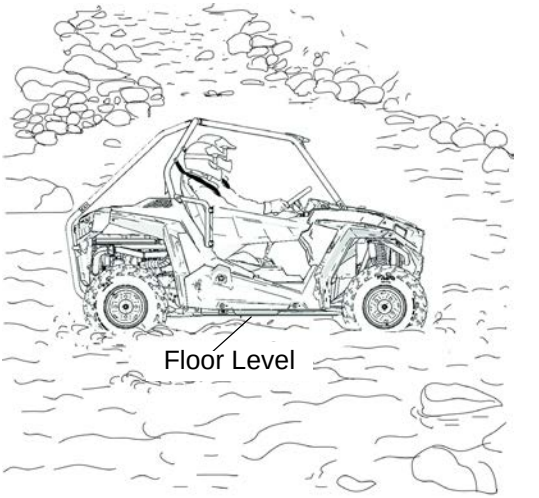

1. Determine water depth and current before entering water.
2. Choose a crossing where the water level is lowest and where both banks have gradual inclines. Never operate in water that exceeds the maximum recommended depth.

WARNING! The large tires on your vehicle may cause the vehicle to float in deep or fast-flowing water, which could result in loss of traction, loss of control, rollover or accident.

3. Wet brakes may have reduced stopping ability. After leaving water, test the brakes. Apply them lightly several times while driving slowly. The friction will help dry out the pads. Avoid applying brake and throttle at the same time.

NOTICE: Major engine damage can result if the vehicle is not thoroughly inspected after operation in water. Perform the services outlined in the maintenance chart. See page 81. Give special attention to engine oil, transmission oil, demand drive fluid, rear gearcase oil, and all grease fittings.

If your vehicle becomes immersed or is operated in water that exceeds the floor level, *service is required before starting the engine.* Your POLARIS dealer can provide this service. If it's impossible to bring the vehicle in before starting the engine, perform the service outlined on page 122, and take the vehicle in for service at the first opportunity.

Driving Over Obstacles

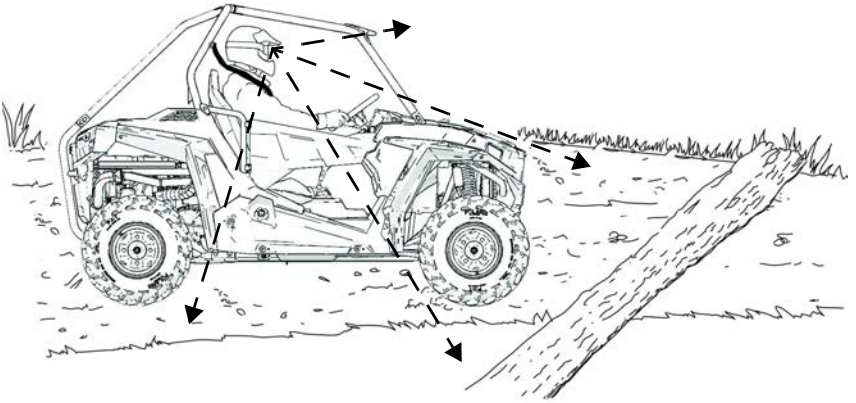

Follow these precautions when operating over obstacles:

1. Always check for obstacles before operating in a new area.
2. Look ahead and learn to read the terrain. Be constantly alert for hazards such as logs, rocks and low hanging branches.
3. Travel slowly and use extra caution when operating on unfamiliar terrain. Not all obstacles are immediately visible.
4. Avoid operating over large obstacles such as large rocks and fallen trees. If unavoidable, use extreme caution and operate slowly.
5. Always have a passenger dismount and move away from the vehicle before operating over an obstacle that could cause a rollover.

Driving in Reverse

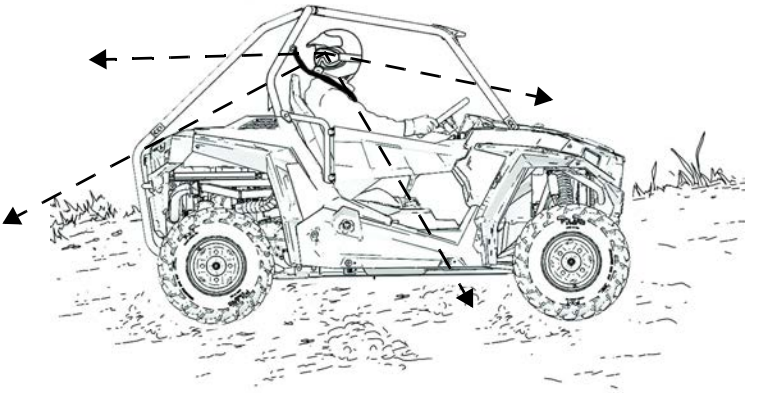

Follow these precautions when operating in reverse:

1. Always check for obstacles or people behind the vehicle.
2. Apply the throttle *lightly*. Never open the throttle suddenly.
3. Back slowly.
4. Apply the brakes *lightly* for stopping.
5. Avoid making sharp turns.

Parking on an Incline

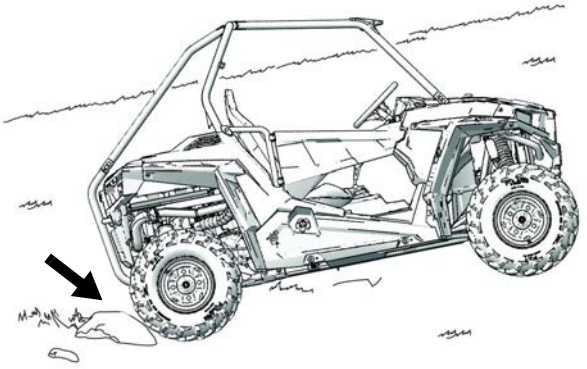

A rolling vehicle can result in serious injury. Avoid parking on an incline. If parking on an incline is *unavoidable*, follow these precautions:

1. Apply the brakes.
2. Place the transmission in PARK.
3. Turn the engine off.
4. Slowly release the brake pedal and make sure the transmission is in PARK before exiting the vehicle.
5. Block the rear wheels on the downhill side.

OPERATION
Hauling Cargo

⚠ WARNING

Overloading the vehicle or carrying cargo improperly can alter vehicle handling and may cause loss of control or brake instability. Always follow these precautions when hauling cargo:

Never exceed the stated load capacity for this vehicle.

REDUCE SPEED AND ALLOW GREATER DISTANCES FOR BRAKING WHEN HAULING CARGO.

NEVER EXCEED THE MAXIMUM WEIGHT CAPACITY of the vehicle. When determining the weight you are adding to the vehicle, include the weight of the operator, passenger, accessories and loads in the rack or box. The combined weight of these items must not exceed the maximum weight capacity.

Always load the cargo box with the load as far forward and as low as possible.

When operating over rough or hilly terrain, reduce speed and cargo to maintain stable driving conditions.

Always operate the vehicle with extreme care when hauling or towing loads. Slow down and drive in the lowest gear available.

SECURE ALL LOADS BEFORE OPERATING. Unsecured loads can create unstable operating conditions, which could result in loss of control of the vehicle.

OPERATE ONLY WITH STABLE AND SAFELY ARRANGED LOADS. When handling off-centered loads that cannot be centered, securely fasten the load and operate with extra caution. Always attach the tow load to the hitch point designated for your vehicle.

HEAVY LOADS CAN CAUSE BRAKING AND CONTROL PROBLEMS. Use extreme caution when applying brakes with a loaded vehicle. Avoid terrain or situations that may require backing downhill.

USE EXTREME CAUTION when operating with loads that extend over the rack sides. Stability and maneuverability may be adversely affected, causing a rollover.

DO NOT TRAVEL FASTER THAN THE RECOMMENDED SPEEDS. Vehicle should never exceed 10 MPH (16 km/h) while cornering or while ascending or descending a hill. Vehicle should never exceed 10 MPH (16 km/h) while towing a load on a level grass surface. Vehicle speed should never exceed 5 MPH (8 km/h) when towing loads in rough terrain, while cornering, or while ascending or descending a hill.

Carrying a passenger in the cargo box could result in a fall from the vehicle or contact with moving components. Never allow a passenger to ride in the cargo box. A passenger must always be seated in a passenger seat with seat belt secured.

Hauling Cargo

Your POLARIS vehicle has been designed to carry or tow a specific capacity. Reduce speed and allow a greater distance for braking when towing or carrying cargo.

Loads should be centered and carried as low as possible in the box. For stability on rough or hilly terrain, reduce both speed and cargo. Exercise caution if the cargo load extends over the side of the box.

Always read and understand the load distribution warnings listed on warning labels and in this manual. The total load (operator, passengers, non-factory installed accessories, cargo and weight on hitch) must not exceed the maximum weight capacity of the vehicle. See page 133.

Belt Life

To extend belt life, use low gear in the following conditions:

- when hauling or towing heavy cargo.
- when consistently operating at speeds less than 35 MPH (56 km/h) in hard-pulling terrain, such as mud, rocks or sand/dune environments.

Towing a RZR

Towing this vehicle is not recommended. Always transport the vehicle on a trailer or flatbed with all four wheels off the ground. See page 132.

If towing a disabled vehicle is unavoidable, place the disabled vehicle’s transmission in neutral. Tow the shortest distance possible. Do not operate faster than 10 MPH (16 km/h).

Towing Loads

WARNING! Towing improperly can alter vehicle handling and may cause loss of control or brake instability.

Towing improperly can alter vehicle handling and may cause loss of control or brake instability. Always follow these precautions when towing:

1. Never load more than 150 lbs. (68.1 kg) tongue weight on the towing bracket.
2. When transporting heavy loads and/or when towing, always operate the vehicle in low gear.
3. Do not operate the vehicle faster than 10 MPH (16 km/h) when towing. See page 66. Towing a trailer increases braking distance.
4. Do not tow more than the recommended weight for the vehicle. See the towing capacity chart below and the specifications charts beginning on page 133.
5. Attach a trailer to the trailer hitch bracket only. Do not attach a trailer to any other location or you may lose control of the vehicle.
6. Never tow a trailer on a grade steeper than 15°.

Total Towed Load Weight (Level Ground)	Total Towed Load Weight (15° grade)	Total Hitch Vertical Weight	Maximum Towing Speed
1500 lbs. (682 kg)	850 lbs. (386 kg)	150 lbs. (68.1 kg)	10 MPH (16 km/h)

These safety warnings and instructions apply if your vehicle came equipped with a winch or if you choose to add an accessory winch to your vehicle.

⚠ WARNING

Improper winch use can result in SEVERE INJURY or DEATH. Always follow all winch instructions and warnings in this manual.

Your winch may have a cable made of either wire rope or specially designed synthetic rope. The term “winch cable” will be used for either unless noted otherwise.

Winch Safety Precautions

1. Read all sections of this manual.
2. Never use alcohol or drugs before or while operating the winch.
3. Never allow children under 16 years of age to operate the winch.
4. Always wear eye protection and heavy gloves when operating the winch.
5. Always keep body, hair, clothing and jewelry clear of the winch cable, fairlead and hook when operating winch.
6. Never attempt to “jerk” a load attached to the winch with a moving vehicle. See the *Shock Loading* section on page 78.
7. Always keep the area around the vehicle, winch, winch cable and load clear of people (especially children) and distractions while operating the winch.
8. Always turn the vehicle ignition power OFF when it and the winch are not being used.
9. Always be sure that at least five (5) full turns of winch cable are wrapped around the winch drum at all times. The friction provided by this wrapped cable allows the drum to pull on the winch cable and move the load.

WINCH GUIDE
Winch Safety Precautions

10. Always apply your vehicle's park brake and/or park mechanism to hold the vehicle in place during winching. Use wheel chocks if needed.
11. Always align the vehicle and winch with the load directly in front of the vehicle as much as possible. Avoid winching with the winch cable at an angle to the winching vehicle's centerline whenever possible.
12. If winching at an angle is unavoidable, follow these precautions:
    A. Look at the winch drum occasionally. Never let the winch cable "stack" or accumulate at one end of the winch drum. Too much winch cable at one end of the winch drum can damage the winch and the winch cable.
    B. If stacking occurs, stop winching. Follow step 15 on page 76 to feed and rewind the cable evenly before continuing the winch operation.
13. Never winch up or down at sharp angles. This can destabilize the winching vehicle and possibly cause it to move without warning.
14. Never attempt to winch loads that weigh more than the winch's rated capacity.
15. The winch motor may become hot during winch use. If you winch for more than 45 seconds, or if the winch stalls during operation, stop winching and permit the winch to cool down for 10 minutes before using it again.
16. Never touch, push, pull or straddle the winch cable while winching a load.
17. Never let the winch cable run through your hands, even if wearing heavy gloves.

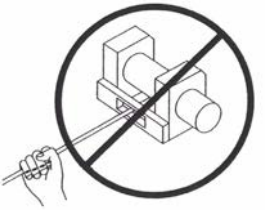

Winch Safety Precautions

18. Never release the clutch on the winch when the winch cable is under load.
19. Never use the winch for lifting or transporting people.
20. Never use the winch to hoist or suspend a vertical load.
21. Never immerse or submerse your winch in water. Your dealer can provide service on your winch if this occurs.
22. Always inspect your winch and winch cable before each use.
23. Never winch the hook fully into the winch. This can cause damage to winch components.
24. Unplug the remote control from the vehicle when the winch is not in use to prevent inadvertent activation and use by unauthorized persons.
25. Never grease or oil the winch cable. This will cause the winch cable to collect debris that will shorten the life of the cable.

WINCH GUIDE
Winch Operation

Read the *Winch Safety Precautions* in the preceding pages before using your winch.

Tip: Consider practicing the operation and use of your winch before you actually need to use it in the field.

⚠ WARNING

Improper winch use can result in SEVERE INJURY or DEATH. Always follow all winch instructions and warnings in this manual.

Each winching situation is unique.

- Take your time to think through the winching you are about to do.
- Proceed slowly and deliberately.
- Never hurry or rush during winching.
- Always pay attention to your surroundings.
- You may need to change your winching strategy if it is not working.
- Always remember that your winch is very powerful.
- There are simply some situations that you and your winch will not be able to deal with. Do not be afraid to ask others to help when this happens.

1. Always inspect the vehicle, winch, winch cable and winch controls for any signs of damage or parts in need of repair or replacement before each use. *Pay particular attention to the first 3 feet (1 meter) of winch cable if the winch is being used (or has been used) for lifting an accessory plow assembly.* Promptly replace any worn or damaged cable.
2. Never operate a winch or a vehicle in need of repair or service.
3. Always apply your vehicle's park brake and/or park mechanism to hold the vehicle in place during winching. Use wheel chocks if needed.

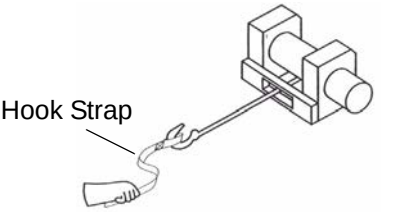

Winch Operation

4. Always use the hook strap when handling the hook.

NO YES

WARNING! Never put your fingers into the hook. This could lead to SEVERE INJURY.

A. Attach the hook itself onto the load or use a tow strap or chain to secure the load to the winch cable.

Tip: A “tow strap” is NOT intended to stretch. A “recovery strap” is designed to stretch.

WARNING! Never use a recovery strap when winching due to the excessive energy that can be released if the winch cable breaks. This can result in SEVERE INJURY or DEATH. See the *Shock Loading* section on page 78.

B. Never hook the winch cable back onto itself. This will damage the winch cable and may result in winch cable failure.

WARNING! Replace the winch cable at the first sign of damage to prevent SEVERE INJURY or DEATH in the event of failure. For your safety, always replace POLARIS winch parts (including the cable) with genuine POLARIS replacement parts available at your authorized POLARIS dealer.

C. If possible, keep the winch cable aligned with the centerline of the winching vehicle. This will help the spooling of the winch cable and reduce the load on the fairlead.

D. If freeing a stuck vehicle by attaching to a tree, use an item such as a tow strap to avoid damaging the tree during winch operation. Sharp cables and chains can damage and even kill trees. Please remember to TreadLightly® (treadlightly.org).

E. Before operating the winch, be sure that the safety latch on the winch cable hook is fully seated when the load is attached.

F. Never operate your winch with a damaged hook or latch. Always replace damaged parts before using the winch.

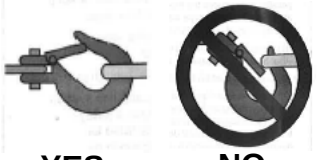

YES NO

Winch Operation

5. Never remove the hook strap from the hook.
6. Release the winch clutch and pull out the winch cable.
7. Pulling out as much cable as possible maximizes the winch's pulling capacity. Always be sure that at least five (5) full turns of winch cable are wrapped around the winch drum at all times. The friction provided by this wrapped cable allows the drum to pull on the winch cable and move the load.
8. Read and adhere to the following information for winch damping to ensure safe winch use.
   A. In order to absorb energy that could be released by a winch cable failure, always place a "damper" on the winch cable. A damper can be a heavy jacket, tarp, or other soft, dense object. A damper can absorb much of the energy released if a winch cable breaks when winching. Even a tree limb can help as a damper if no other items are available to you.
   B. Lay the damper on top of the mid-point of the winch cable length that is spooled out.
   C. On a long pull, it may be necessary to stop winching so that the damper can be repositioned to the new mid-point of the winch cable. Always release the tension on the winch cable before repositioning the damper.
   D. Avoid being directly in line with the winch cable whenever possible. Also, never permit others to stand near or in line with the winch cable during winch operation.
9. Never hook the winch cable back onto itself. This will damage the winch cable and may result in winch cable failure.
10. Never use straps, chains or other rigging items that are damaged or worn.

Winch Operation

11. The ONLY time a winch-equipped vehicle should be moving when using the winch is when that vehicle itself is stuck. The winch-equipped vehicle should NEVER be in motion to “shock” load the winch cable in an attempt to move a second stuck vehicle. See the *Shock Loading* section on page 78. For your safety, always follow these guidelines when winching a vehicle free:
    A. Release the winch clutch and spool out the necessary length of winch cable.
    B. Align the winch cable as close as possible to the winching vehicle’s centerline.
    C. Attach the winch cable hook to the anchor point or the stuck vehicle’s frame following instructions in this manual.
    D. Re-engage the clutch on the winch.
    E. Slowly winch in the slack in the winch cable.
    F. Select the proper vehicle gear to propel the stuck vehicle in the direction of winching.
    G. Shift to the lowest gear available on the stuck vehicle.
    H. Slowly and carefully apply vehicle throttle and winch together to free the vehicle.
    I. Stop winching as soon as the stuck vehicle is able to propel itself without the help of the winch.
    J. Detach the winch cable hook.
    K. Rewind the winch cable evenly back onto the winch drum following the instructions in this manual.
12. Never attempt to winch another stuck vehicle by attaching the winch cable to a suspension component, brush guard, bumper or cargo rack. Vehicle damage may result. Instead, attach the winch to a strong portion of the vehicle frame or hitch.
13. Extensive winching will run down the battery on the winching vehicle. Let the winching vehicle’s engine run while operating the winch to prevent the battery from running low if winching for long periods.

WINCH GUIDE
Winch Operation

14. The winch motor may become hot during winch use. If you winch for more than 45 seconds, or if the winch stalls during operation, stop winching and permit the winch to cool down for 10 minutes before using it again.
15. After winching is complete, especially if winching at an angle, it may be necessary to re-distribute the winch cable across the winch drum. You will need an assistant to perform this task.
    A. Release the clutch on the winch.
    B. Feed out the winch cable that is unevenly bunched up in one area.
    C. Re-engage the winch clutch.
    D. Have an assistant pull the winch cable tightly with about 100 lbs. (45 kg) of tension using the hook strap.
    E. Slowly winch the cable in while your assistant moves the end of the winch cable back and forth horizontally to evenly distribute the winch cable on the drum.
    F. Doing this reduces the chances of the winch cable “wedging” itself between lower layers of winch cable.

Winch Cable Care

For your safety, always replace POLARIS winch parts (including the cable) with genuine POLARIS replacement parts available at your authorized POLARIS dealer.

WARNING! Use of worn or damaged cable could lead to sudden failure and SEVERE INJURY.

1. Always inspect your winch before each use. Inspect for worn or loose parts including mounting hardware. Never use the winch if any part needs repair or replacement.
2. Always inspect your winch cable before each use. Inspect for worn or kinked winch cable.
   A. A kinked winch cable made of wire rope is shown at right. Even after being “straightened out,” this cable has already been permanently and severely damaged. Promptly discontinue use of a winch cable in this condition.

   B. A kinked winch cable made of wire rope that has been “straightened out” is shown at right. Even though it may look usable, the cable has been permanently and severely damaged. It can no longer transmit the load that it could prior to kinking. Promptly discontinue use of a winch cable in this condition.

   C. A winch cable made of synthetic rope should be inspected for signs of fraying. Replace the cable if fraying is observed (shown at right). Promptly discontinue use of a winch cable in this condition.

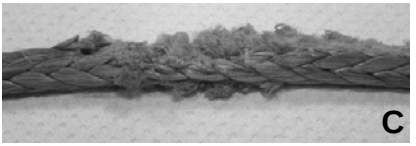

   D. Also replace the winch cable if there are fused or melted fibers. Such an area of the synthetic rope will be stiff and appear smooth or glazed. Promptly discontinue use of a winch cable in this condition.

WINCH GUIDE
Shock Loading

WARNING! Your winch cable is very strong but it is NOT designed for dynamic, or “shock” loading. Shock loading may tension a winch cable beyond its strength and cause the cable to break. The end of a broken winch cable under such high loading can cause SEVERE INJURY or DEATH to you and other bystanders.

Winch cables are designed to NOT absorb energy. This is true of both wire-rope and synthetic-rope winch cables.

1. Never attempt to “jerk” a load with the winch. For example, never take up slack in the winch cable by moving the winching vehicle in an attempt to move an object. This is a dangerous practice. It generates high winch cable loads that may exceed the strength of the cable. Even a slowly moving vehicle can create large shock loads in a winch cable.

WARNING! SEVERE INJURY or DEATH can result from a broken winch cable.

2. Never quickly turn the winch ON and OFF repeatedly (“jogging”). This puts extra load on the winch, winch cable, and generates excessive heat from the motor. This is a form of shock loading.
3. Never tow a vehicle or other object with your winch. Towing an object with a winch produces shock loading of the cable even when towing at slow speeds. Towing from a winch also positions the towing force high on the vehicle. This can cause instability of the vehicle and possibly lead to an accident.
4. Never use recovery straps with your winch. Recovery straps are designed to stretch and can store energy. This stored energy in the recovery strap is released if a winch cable fails making the event even more hazardous. Similarly, never use elastic “bungie” cords for winching.
5. Never use the winch to tie down a vehicle to a trailer or other transportation vehicle. This type of use also causes shock loading that can cause damage to the winch, winch cable, or vehicles used.

Your winch cable is designed and tested to withstand the loads produced by the winch motor when operated from a stationary vehicle. Always remember that the winch and winch cable are NOT designed for shock loading.

Winch Maintenance and Service Safety

WARNING! Improper or lack of winch maintenance and service could lead to SEVERE INJURY or DEATH. Always follow all winch instructions and warnings in this manual.

1. Always inspect your winch before each use. Inspect for worn or kinked winch cable. Also inspect for worn or loose parts including mounting hardware.
2. Permit your winch motor to cool down prior to servicing your winch.
3. Never work on your winch without first disconnecting the battery connections to prevent accidental activation of the winch.
4. For your safety, always replace POLARIS winch parts (including the cable) with genuine POLARIS replacement parts available at your authorized POLARIS dealer.
5. Some winch models use wire rope as the winch cable. Other winches use a specially designed synthetic rope as the winch cable.
6. Never replace a synthetic-rope winch cable with a consumer-grade polymer rope such as can be purchased in a hardware store. Although they may look similar, they are NOT alike. A polymer rope not designed for winch use will stretch and store excessive energy when winching.

WARNING! Failure of a stretched rope under winching conditions will release all of the stored energy. This will increase the chances of SEVERE INJURY or DEATH.

EMISSION CONTROL SYSTEMS

Noise Emission Control System

Do not modify the engine, intake or exhaust components, as doing so may affect compliance with U.S.A. EPA noise control requirements (40 CFR 205) and local noise level requirements.

Operation on Public Lands in the U.S.A.

Your POLARIS vehicle has a spark arrester that was tested and qualified to be in accordance with the USFS standard 5100-1C. Federal law requires that this spark arrester be installed and functional when the vehicle is operated on public lands.

Operation of off-road vehicles on public lands in the U.S.A. is regulated by 43 CFR 420. Violations are subject to monetary penalties. Federal regulations can be viewed online at www.gpoaccess.gov/ecfr/.

Crankcase Emission Control System

This engine is equipped with a closed crankcase system. Blow-by gases are forced back to the combustion chamber by the intake system. All exhaust gases exit through the exhaust system.

Exhaust Emission Control System

Exhaust emissions are controlled by engine design. An electronic fuel injection (EFI) system controls fuel delivery. The engine and EFI components are set at the factory for optimal performance and are not adjustable.

The emissions label is located on the left front frame tube of the vehicle.

Electromagnetic Interference

This spark ignition system complies with Canadian ICES-002.

This vehicle complies with the EMC requirements of European directives 97/24/EC and 2004/108/EC.

Non-ionizing Radiation: This vehicle emits some electromagnetic energy. People with active or non-active implantable medical devices (such as heart monitoring or controlling devices) should review the limitations of their device and the applicable electromagnetic standards and directives that apply to this vehicle.

Periodic Maintenance Chart

Any qualified repair shop or person may maintain, replace or repair the emission control devices or systems on your vehicle. An authorized POLARIS dealer can perform any service that may be necessary for your vehicle. POLARIS also recommends POLARIS parts for emissions-related service, however equivalent parts can be used.

It is a potential violation of the Clean Air Act if a part supplied by an aftermarket parts manufacturer reduces the effectiveness of the vehicle’s emission controls. Tampering with emission controls is prohibited by federal law.

Owners are responsible for performing the scheduled maintenance identified in this owner’s manual.

Careful periodic maintenance will help keep your vehicle in the safest, most reliable condition. Inspection, adjustment and lubrication of important components are explained in the periodic maintenance chart.

Inspect, clean, lubricate, adjust and replace parts as necessary. When inspection reveals the need for replacement parts, genuine POLARIS parts are available from your POLARIS dealer. Equivalent parts may be used for emissions-related service.

Service and adjustments are important for proper vehicle operation. If you're not familiar with safe service and adjustment procedures, a qualified dealer can perform these operations.

Vehicles subjected to heavy or severe use patterns must be inspected and serviced more frequently.

Severe Use Definition

- Frequent immersion in mud, water or sand
- Racing or race-style high RPM use
- Prolonged low speed, heavy load operation
- Extended idle
- Frequent short trip operation in cold weather (engine frequently does not operate long enough to reach full operating temperature)

Pay special attention to the oil level. A rise in oil level during cold weather can indicate contaminants collecting in the oil sump or crankcase. Change oil immediately if the oil level begins to rise. Monitor the oil level, and if it continues to rise, discontinue use and determine the cause. Your POLARIS dealer can assist.

MAINTENANCE
Periodic Maintenance Chart
Maintenance Chart Key

XU Perform these operations more often for vehicles subjected to severe use.

D Have an authorized POLARIS dealer or other qualified person perform these services.

WARNING! Improperly performing the procedures marked with a **"D"** could result in component failure and lead to serious injury or death. Have an authorized POLARIS dealer or other qualified person perform these services.

Perform all services at whichever maintenance interval is reached first. Record maintenance and service in the Maintenance Log beginning on page 153.

RZR 900 Models					
Item		**Maintenance Interval** (whichever comes first)			**Remarks**
		Hours	**Calendar**	**Miles (Km)**	
	Steering	-	Pre-Ride	-	Make adjustments as needed. See Pre-Ride Checklist on page 51.
	Front suspension	-	Pre-Ride	-	
	Rear suspension	-	Pre-Ride	-	
	Tires	-	Pre-Ride	-	
	Brake fluid level	-	Pre-Ride	-	
	Brake pedal travel				
	Brake system	-	Pre-Ride	-	
	Wheels/fasteners	-	Pre-Ride	-	
	Frame fasteners	-	Pre-Ride	-	
	Engine oil level	-	Daily	-	
	Air filter, pre-filter	-	Daily	-	Inspect; clean often; replace as needed
	Air box sediment tube	-	Daily	-	Drain deposits when visible
	Coolant	-	Daily	-	Check coolant level
	PVT intake	-	Daily	-	Inspect; clean often
XU	Power steering unit (if equipped)	-	Daily	-	Inspect daily; clean often
	Headlight/taillight	-	Daily	-	Check operation
	Air Filter	-	Weekly	-	Inspect; replace as needed
D	Brake pad wear	10 H	Monthly	100 (160)	Inspect periodically
XU	Front gearcase (demand drive) fluid	25 H	1 M	-	Perform a break-in oil level check
XU	Transmission (main gearcase) oil	25 H	1 M	250 (400)	Perform a break-in oil level check

Periodic Maintenance Chart

RZR 900 Models					
Item		**Maintenance Interval** (whichever comes first)			**Remarks**
		Hours	**Calendar**	**Miles (Km)**	
XU	Engine oil change (break-in)	25 H	1 M	-	Perform a break-in oil change
XU	Engine breather filter (if equipped)	25 H	1 M	250 (400)	Inspect; replace as needed
	Fuel System	25 H	Monthly	-	Inspect; cycle key to pressurize fuel pump; check lines and fittings for leaks and abrasion
	Battery	25 H	Monthly	250 (400)	Check terminals; clean; test
XU	General lubrication	50 H	3 M	500 (800)	Lubricate all fittings, pivots, cables, etc.
D	Throttle pedal	50 H	6 M	500 (800)	Inspect for free movement; replace pedal as needed
	Throttle body air intake ducts/flange	50 H	6 M	500 (800)	Inspect duct for proper sealing/air leaks
	Shift Linkage	50 H	6 M	500 (800)	Inspect, adjust
XU	Front Suspension	50 H	6 M	500 (800)	Lubricate and inspect bushings
XU	Rear Suspension	50 H	6 M	500 (800)	Lubricate and inspect bushings
	Cooling system (if applicable)	50 H	6 M	1000 (1600)	Inspect coolant strength seasonally; pressure test system yearly
XU	Oil lines, fasteners	50 H	6 M	1000 (1600)	Inspect for leaks and loose fittings
	Drive belt	50 H	6 M	1000 (1600)	Inspect; adjust; replace as needed
XU	Engine oil change	100 H	6 M	1000 (1600)	Change the oil and filter
XU	Front gearcase (demand drive) fluid	100 H	12 M	1000 (1600)	Change fluid
XU	Transmission (main gearcase) oil	100 H	12 M	1000 (1600)	Change fluid
D	Fuel system/filter	100 H	12 M	1000 (1600)	Cycle key to pressurize fuel pump; check for leaks at fill cap, fuel lines/rail and fuel pump; replace lines every two years
XU	Spark plugs	100 H	12 M	1000 (1600)	Inspect; replace as needed, torque to specification

XU Perform these procedures more often for vehicles subjected to severe use.
D Have an authorized POLARIS dealer or other qualified person perform these services.

MAINTENANCE
Periodic Maintenance Chart

RZR 900 Models					
Item		**Maintenance Interval** (whichever comes first)			**Remarks**
		Hours	**Calendar**	**Miles (Km)**	
XU	Radiator	100 H	12 M	1000 (1600)	Inspect; clean external surfaces
XU	Cooling Hoses	100 H	12 M	1000 (1600)	Inspect for leaks
XU	Engine mounts	100 H	12 M	1000 (1600)	Inspect
	Exhaust muffler/ pipe	100 H	12 M	1000 (1600)	Inspect
XU	Wiring	100 H	12 M	1000 (1600)	Inspect for wear, routing, security; apply dielectric grease to connectors subjected to water, mud, etc.
D	Clutches (drive and driven)	100 H	12 M	1000 (1600)	Inspect; clean; replace worn parts
XU	Shock Seals	100 H	-	-	Inspect shock seals
XU D	Shocks	-	12 M	1500 (2400)	See your dealer for oil change/seal inspection.
D	Front wheel bearings	100 H	12 M	1000 (1600)	Inspect; replace as needed
D	Brake fluid	200 H	24 M	2000 (3200)	Change every two years
	Suspension bushings	250 H	24 M	2000 (3200)	Inspect; replace if necessary
	Spark arrester	200 H	24 M	2000 (3200)	Clean daily when driving in mud and water; replace a cracked or damaged arrester before operating (see page 109)
	Valve clearance	500 H	-	5000 (8000)	Check; adjust as needed
XU	Coolant	-	60 M	-	Replace coolant
D	Toe adjustment	-			Inspect periodically; adjust when parts are replaced
	Headlight aim	-			Adjust as needed

XU Perform these procedures more often for vehicles subjected to severe use.
D Have an authorized POLARIS dealer or other qualified person perform these services.

Periodic Maintenance Chart

Perform all services at whichever maintenance interval is reached first. Record maintenance and service in the Maintenance Log beginning on page 153.

RZR 1000 Models					
Item		**Maintenance Interval** (whichever comes first)			**Remarks**
		Hours	**Calendar**	**Miles (Km)**	
	Steering	-	Pre-Ride	-	Make adjustments as needed. See Pre-Ride Checklist on page 51.
	Front suspension	-	Pre-Ride	-	
	Rear suspension	-	Pre-Ride	-	
	Tires	-	Pre-Ride	-	
	Brake fluid level	-	Pre-Ride	-	
	Brake pedal travel				
	Brake system	-	Pre-Ride	-	
	Wheels/fasteners	-	Pre-Ride	-	
	Frame fasteners	-	Pre-Ride	-	
	Engine oil level	-	Daily	-	
	Air filter, pre-filter	-	Daily	-	Inspect; clean often; replace as needed
	Air box sediment tube	-	Daily	-	Drain deposits when visible
	Coolant	-	Daily	-	Check coolant level
	PVT intake	-	Daily	-	Inspect; clean often
XU	Power steering unit (if equipped)	-	Daily	-	Inspect daily; clean often
	Headlight/taillight	-	Daily	-	Check operation
	Air Filter	-	Weekly	-	Inspect; replace as needed
XU D	Brake pad wear	10 H	Monthly	100 (160)	Inspect periodically
XU	Front gearcase (demand drive) fluid	25 H	1 M	-	Perform a break-in oil level check
XU	Transmission (main gearcase) oil	25 H	1 M	250 (400)	Perform a break-in oil level check
D	Drive clutch bolt re-torque	25 H	1 M	-	See your dealer to have bolt re-torqued to 96 ft-lbs (130 Nm)

XU Perform these procedures more often for vehicles subjected to severe use.
D Have an authorized POLARIS dealer or other qualified person perform these services.

MAINTENANCE
Periodic Maintenance Chart

RZR 1000 Models					
Item		**Maintenance Interval** (whichever comes first)			**Remarks**
		Hours	**Calendar**	**Miles (Km)**	
XU	Engine oil change (break-in)	25 H	1 M	-	Perform a break-in oil change
XU	Engine breather filter (if equipped)	25 H	1 M	250 (400)	Inspect; replace as needed
	Fuel System	25 H	Monthly	-	Inspect; cycle key to pressurize fuel pump; check lines and fittings for leaks and abrasion
	Battery	25 H	Monthly	250 (400)	Check terminals; clean; test
XU	General lubrication	50 H	3 M	500 (800)	Lubricate all fittings, pivots, cables, etc.
D	Throttle pedal	50 H	6 M	500 (800)	Inspect for free movement; replace pedal as needed
	Throttle body air intake ducts/flange	50 H	6 M	500 (800)	Inspect duct for proper sealing/air leaks
	Shift Linkage	50 H	6 M	500 (800)	Inspect, adjust
	Front and rear suspension	50 H	6 M	500 (800)	Inspect Bushings
XU	Front and rear stabilizer bars	50 H	6 M	500 (800)	Lubricate and inspect bushings
	Cooling system (if applicable)	50 H	6 M	1000 (1600)	Inspect coolant strength seasonally; pressure test system yearly
XU	Oil lines, fasteners	50 H	6 M	1000 (1600)	Inspect for leaks and loose fittings
	Drive belt	50 H	6 M	500 (800)	Inspect; adjust; replace as needed
XU	Radiator	50 H	6 M	1000 (1600)	Inspect; clean external surfaces
XU	Cooling Hoses	50 H	6 M	1000 (1600)	Inspect for leaks
XU	Engine oil change	100 H	6 M	1000 (1600)	Change the oil and filter
XU	Front gearcase (demand drive) fluid	100 H	12 M	1000 (1600)	Change fluid
XU	Transmission (main gearcase) oil	100 H	12 M	1000 (1600)	Change fluid

XU Perform these procedures more often for vehicles subjected to severe use.
D Have an authorized POLARIS dealer or other qualified person perform these services.

Periodic Maintenance Chart

RZR 1000 Models					
Item		**Maintenance Interval** (whichever comes first)			**Remarks**
		Hours	**Calendar**	**Miles (Km)**	
D	Fuel system/filter	100 H	12 M	1000 (1600)	Cycle key to pressurize fuel pump; check for leaks at fill cap, fuel lines/rail and fuel pump; replace lines every two years
XU	Spark plugs	100 H	12 M	1000 (1600)	Inspect; replace as needed, torque to specification
XU	Engine mounts	100 H	12 M	1000 (1600)	Inspect
	Exhaust muffler/ pipe	100 H	12 M	1000 (1600)	Inspect
XU	Wiring	100 H	12 M	1000 (1600)	Inspect for wear, routing, security; apply dielectric grease to connectors subjected to water, mud, etc.
D	Clutches (drive and driven)	100 H	12 M	1000 (1600)	Inspect; clean; replace worn parts
XU	Shock Seals	100 H	-	-	Inspect shock seals
XU D	Shocks	-	12 M	1500 (2400)	See your dealer for oil change/seal inspection.
D	Front wheel bearings	100 H	12 M	1000 (1600)	Inspect; replace as needed
D	Brake fluid	200 H	24 M	2000 (3200)	Change every two years
	Suspension bushings	250 H	24 M	2000 (3200)	Inspect; replace if necessary
	Spark arrester	200 H	24 M	2000 (3200)	Clean daily when driving in mud and water; replace a cracked or damaged arrester before operating (see page 109)
	Valve clearance	1000 H	-	10000 (16000)	Check; adjust as needed
XU	Coolant	-	60 M	-	Replace coolant
D	Toe adjustment	-			Inspect periodically; adjust when parts are replaced
	Headlight aim	-			Adjust as needed

XU Perform these procedures more often for vehicles subjected to severe use.
D Have an authorized POLARIS dealer or other qualified person perform these services.

MAINTENANCE
Lubrication Recommendations

Check and lubricate all components at the intervals outlined in the Periodic Maintenance Chart beginning on page 81, or more often under severe use, such as wet or dusty conditions. Items not listed in the chart should be lubricated at the general lubrication interval.

Item	Lube	Method
Engine Oil	PS-4 5W-50 4-Cycle Oil and PS-4 Extreme Duty 10W-50 4-Cycle Oil	See page 90.
Brake Fluid	DOT 4 Brake Fluid	Maintain level between fill lines. See page 112.
Transmission Oil (Main Gearcase)	AGL Gearcase Lubricant & Transmission Fluid	See page 94.
Front Gearcase Fluid (Demand Drive)	Demand Drive Fluid	See page 96.
Prop Shaft	U-Joint Grease	Grease middle and rear fittings.
Stabilizer Bar Bushings	All Season Grease or grease conforming to NLGI No. 2	Grease front and rear fittings

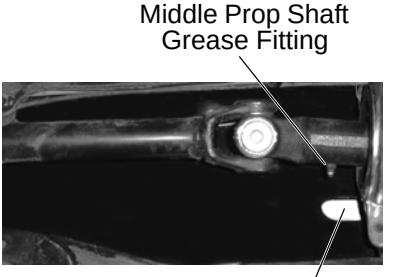

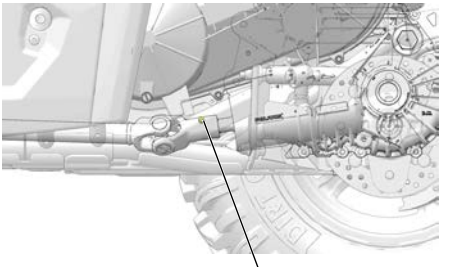

Lubrication Recommendations

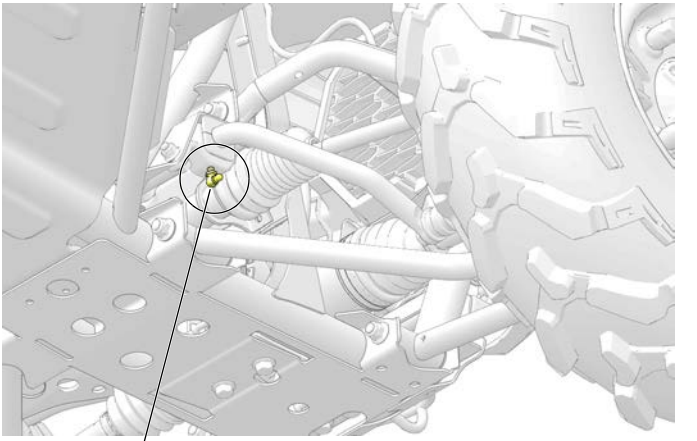

Front Stabilizer Bar
RZR 900 / RZR 900 EPS Trail

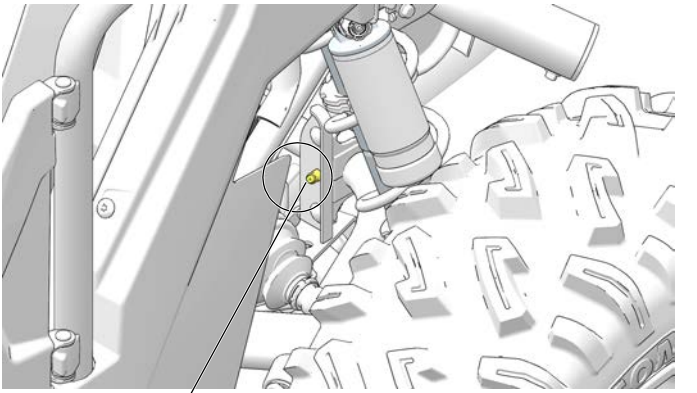

Rear Stabilizer Bar
All Models

MAINTENANCE
Engine Oil
Oil Recommendations

WARNING! Vehicle operation with insufficient, deteriorated, or contaminated engine oil will cause accelerated wear and may result in engine seizure, accident, and injury. Always perform the maintenance procedures as outlined in the Periodic Maintenance Chart.

Ambient Temperature Range	Recommended Oil
-35° F to +100° F (-37° C to +38° C)	PS-4 5W-50 4-Cycle Oil
0° F to 120° F (-18° C to +49° C)	PS-4 Extreme Duty 10W-50 4-Cycle Oil

Oil may need to be changed more frequently if POLARIS oil is not used. Do not use automotive oil. Follow the manufacturer's recommendations for ambient temperature operation. See page 141 for the part numbers of POLARIS products.

NOTICE: Mixing brands or using a non-recommended oil may cause serious engine damage. Always use the recommended oil. Never substitute or mix oil brands.

Engine Oil

Always check and change the oil at the intervals outlined in the Periodic Maintenance Chart beginning on page 81. Always use the recommended engine oil.

Oil Check

Always check the oil when the engine is cold. If the engine is hot when the oil is checked, the level will appear to be overfull.

Access the oil check dipstick and oil filter through the engine access panel located behind the seats.

1. Position the vehicle on a level surface.
2. Place the transmission in PARK.

NOTE: Always check the oil when the engine is cold.

3. Remove the seats and remove the engine access panel.
4. Remove the dipstick. Wipe it dry with a clean cloth.
5. Reinstall the dipstick completely. Remove the dipstick and check the oil level.
6. Remove the oil fill cap to add the recommended oil as needed. Maintain the oil level between the minimum and maximum marks on the dipstick. Do not overfill.
7. Reinstall the fill cap. Reinstall the dipstick.

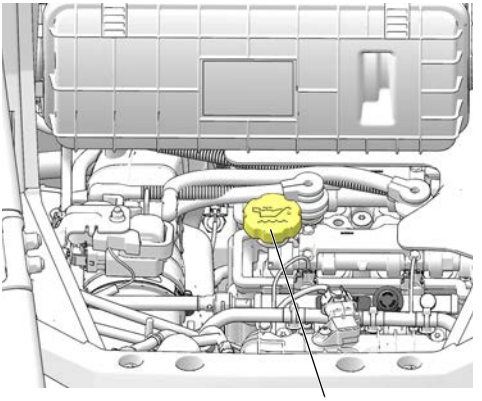

MAINTENANCE
Engine Oil
Oil and Filter Change

Always change the oil and filter at the intervals outlined in the Periodic Maintenance Chart beginning on page 81. Always change the oil filter whenever changing oil.

Access the oil check dipstick and oil filter through the engine access panel located behind the seats.

The crankcase drain plug is located on the bottom of the crankcase. Access the drain plug through the access hole under the crankcase.

1. Position the vehicle on a level surface. Place the transmission in PARK.
2. Clean the area around the crankcase drain plug.

CAUTION! Hot oil can cause burns to skin. Do not allow hot oil to contact skin.

3. Place a drain pan under the engine crankcase and remove the drain plug. Allow the oil to drain completely.
4. Remove the seats and remove the engine access panel.
5. Using an oil filter wrench, turn the filter counter-clockwise to remove it.
6. Using a clean dry cloth, clean the filter sealing surface on the crankcase.

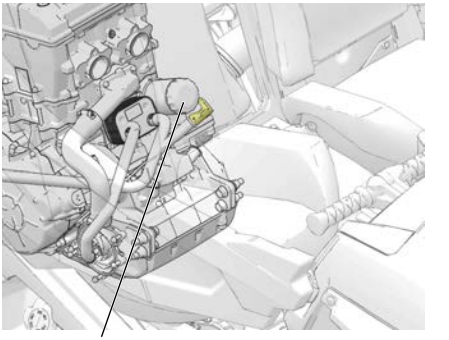

Engine Oil

Oil and Filter Change

7. Lubricate the o-ring on the new filter with a film of fresh engine oil. Check to make sure the o-ring is in good condition.
8. Install the new filter and turn by hand until the filter gasket contacts the sealing surface, then turn an additional 3/4 turn.
9. Reinstall the crankcase drain plug. Torque to 12 ft. lbs. (16 Nm).
10. Remove the oil fill cap and add 2.5 quarts (2.4 l) of recommended oil. Reinstall the fill cap.
11. Start the engine and check for leaks.
12. Stop the engine and wait 15 seconds before removing the dipstick.
13. Remove the dipstick. Wipe it dry with a clean cloth.
14. Reinstall the dipstick completely. Remove the dipstick and check the oil level.
15. Add oil as necessary to bring the level to the upper mark on the dipstick. Do not overfill.
16. Reinstall the dipstick.
17. Reinstall the oil fill cap.
18. Dispose of used filter and oil properly.

MAINTENANCE
Transmission (Main Gearcase)

Always check and change the fluid at the intervals outlined in the Periodic Maintenance Chart beginning on page 81. Refer to the Gearcase Specifications Chart on page 98 for recommended lubricants, capacities and torque specifications.

Fluid Check

The fill plug is located on the rear of the gearcase. Maintain the fluid level at the bottom of the fill plug hole.

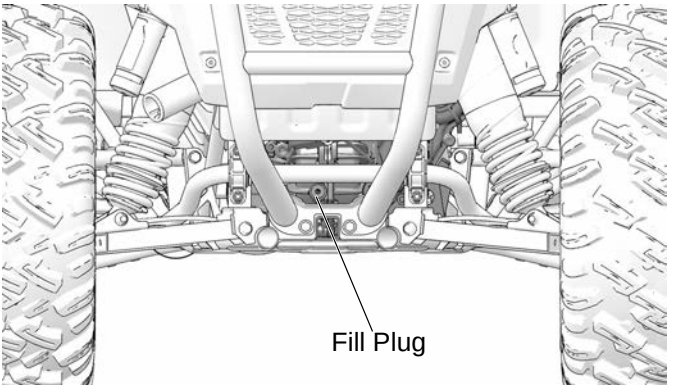

1. Position the vehicle on a level surface.
2. Remove the fill plug.
3. Check the fluid level.
4. Add the recommended fluid to the bottom of the fill plug hole. Do not overfill.
5. Reinstall the fill plug. Torque to specification.

Transmission (Main Gearcase)

Fluid Change

The drain plug is located on the bottom of the gearcase. Access the drain plug through the drain hole in the skid plate.

1. Remove the fill plug.
2. Place a drain pan under the drain plug.
3. Remove the drain plug. Allow the fluid to drain completely.
4. Clean the drain plug.
5. Reinstall the drain plug. Torque to specification.
6. Add the recommended fluid to the bottom of the fill plug hole. Do not overfill.
7. Reinstall the fill plug. Torque to specification.
8. Check for leaks. Discard used fluid properly.

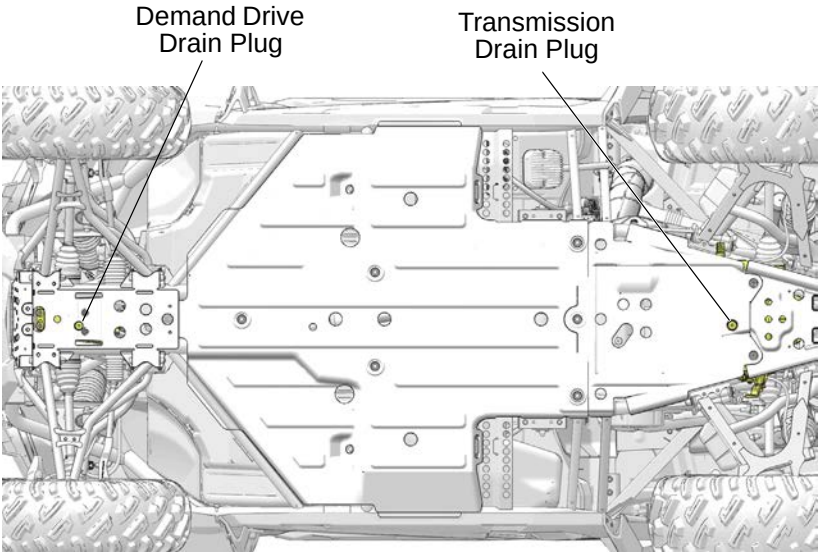

MAINTENANCE
Demand Drive Unit (Front Gearcase)

Always check and change the fluid at the intervals outlined in the Periodic Maintenance Chart beginning on page 81. Refer to the Gearcase Specifications Chart on page 98 for recommended lubricants, capacities and torque specifications.

Fluid Check

The fill plug is located on the bottom right side of the demand drive unit. Maintain the fluid level even with the bottom thread of the fill plug hole.

1. Position the vehicle on a level surface.
2. Remove the fill plug. Check the fluid level.
3. Add the recommended fluid to the bottom thread of the fill plug hole.
4. Reinstall the fill plug. Torque to specification.

Demand Drive Unit (Front Gearcase)

Fluid Change

The drain plug is located on the bottom of the gearcase.

1. Remove the fill plug.
2. Place a drain pan under the drain plug.
3. Remove the drain plug. Allow the fluid to drain completely.
4. Clean the drain plug.
5. Reinstall the drain plug. Torque to specification.
6. Add the recommended fluid to the bottom thread of the fill plug hole.
7. Reinstall the fill plug. Torque to specification.
8. Check for leaks. Discard used fluid properly.

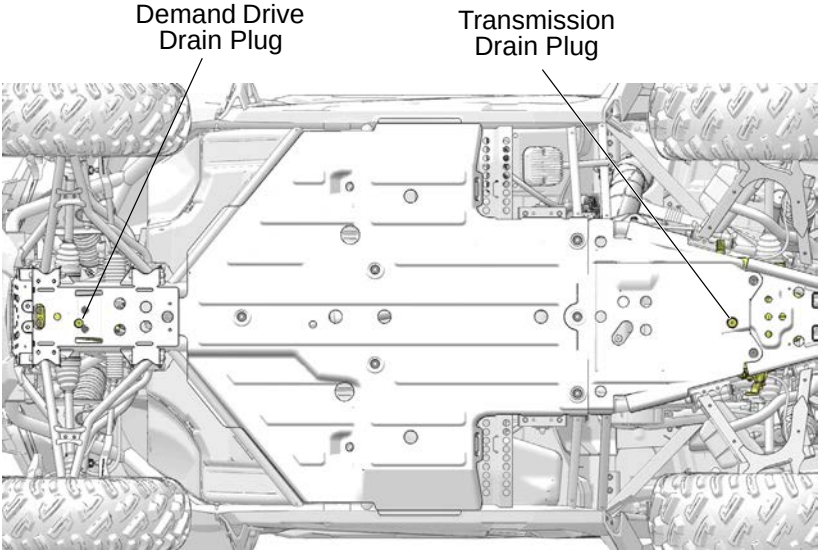

MAINTENANCE

Gearcases

Gearcase Specification Chart

Use of other fluids may result in improper operation of components. See page 141 for the part numbers of POLARIS products.

Gearcase	Lubricant	Capacity	Fill Plug Torque	Drain Plug/ Level Check Plug Torque
Transmission (Main Gearcase)	AGL Gearcase Lubricant & Transmission Fluid	44 oz. (1300 ml) Turf Models: 40.5 oz. (1200 ml)	10-14 ft. lbs. (14-19 Nm)	10-14 ft. lbs. (14-19 Nm)
Demand Drive Unit (Front Gearcase)	Demand Drive Fluid	7.5 oz. (222 ml)	8-10 ft. lbs. (11-14 Nm)	8-10 ft. lbs. (11-14 Nm)

Spark Plugs

Spark Plug Gap/Torque

Electrode Gap	Spark Plug Torque
0.7-0.8 mm	7 ft. lbs. (10 Nm)

NOTICE: Using non-recommended spark plugs can result in serious engine damage. Always use POLARIS-recommended spark plugs or their equivalent. Refer to the specifications section beginning on page 133.

Spark plug condition is indicative of engine operation. The spark plug firing end condition should be read after the engine is warmed up and the vehicle is driven at higher speeds. Immediately check the spark plug for correct color. See page 99.

CAUTION! A hot exhaust system and engine can cause burns. Wear protective gloves when removing a spark plug for inspection.

Spark Plugs

Spark Plug Removal and Replacement

1. Remove the cargo box access panel.
2. Clean the area around the spark plugs before removing the plugs.
3. Remove the spark plug caps.
4. Using the spark plug wrench provided in the tool kit, remove the plugs by rotating them counter-clockwise.
5. Reverse the procedure for spark plug installation. Torque to specification. See page 98.

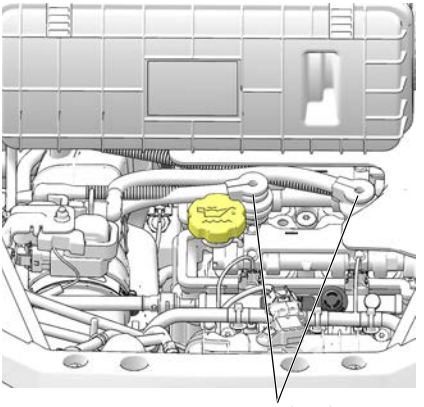

Spark Plug Condition

Normal Plug

The normal insulator tip is gray, tan or light brown. There will be few combustion deposits. The electrodes are not burned or eroded. This indicates the proper type and heat range for the engine and the service.

Tip: The tip should not be white. A white insulator tip indicates overheating, caused by use of an improper spark plug or incorrect throttle body adjustments.

Wet Fouled Plug

The wet fouled insulator tip is black. A damp oil film covers the firing end. There may be a carbon layer over the entire nose. Generally, the electrodes are not worn. Fouling may be caused by excessive oil or by frequent short trips, especially in cold weather.

MAINTENANCE
Fuse/Relay Center

If the engine stops or will not start, if the power steering stops working (if equipped), or if you experience other electrical failures, a fuse may need replacement. Locate and correct any short circuits that may have caused the blown fuse, then replace the fuse. The fuse/relay center is located under the driver's seat (RZR/RZR S) or under the left rear passenger seat (RZR 4).

Label	Value	Function
FAN	20A Circuit Breaker	Fan
EFI	10A Fuse	EFI Relay, Injectors, Coil, ECM, Chassis Relay Coil, Fan Relay Coil, Fuel Pump Relay Coil
KEY	10A Fuse	Gauge, EFI Relay Coil, EPS Relay Coil, Key Switch
TERM	10A Fuse	Under Hood Terminal Block, Interior LED
EPS	20A Fuse	Power Steering (optional)
LIGHTS	15A Fuse	Headlights, Taillights, Dash Lighting
DRIVE	10A Fuse	All-Wheel Drive, TURF (optional)
ACCESSORY	10A Fuse (RZR) 15A Fuses (2) (RZR S4)	12V Receptacle

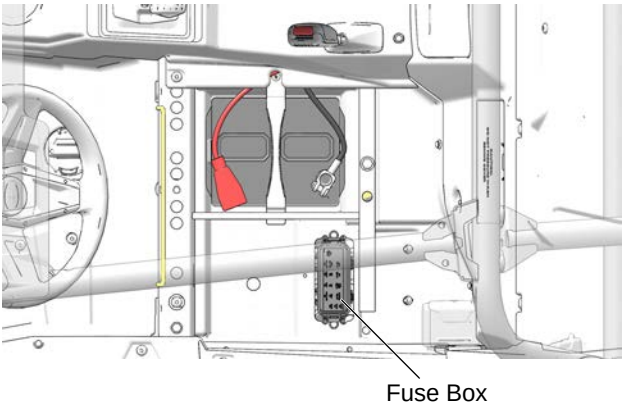

Cooling System

The engine coolant level is maintained by the recovery system. The recovery system components are the overflow bottle, radiator vent fitting, radiator pressure cap and connecting hose.

As coolant operating temperature increases, the expanding (heated) excess coolant is forced out of the radiator, past the pressure cap, and into the overflow bottle. As engine coolant temperature decreases, the contracting (cooled) coolant is drawn back up from the tank, past the pressure cap, and into the radiator.

Tip: Some coolant level drop on new vehicles is normal as the system is purging itself of trapped air. Observe coolant levels and maintain as recommended by adding coolant to the overflow bottle.

Adding or Changing Coolant

POLARIS recommends the use of POLARIS Antifreeze 50/50 Premix. This antifreeze is already premixed and ready to use. Do not dilute with water. See page 141 for the part numbers of POLARIS products.

To ensure that the coolant maintains its ability to protect the engine, we recommend that the system be completely drained every five (5) years and fresh Antifreeze 50/50 Premix added. See page 103 for changing procedure.

Any time the cooling system has been drained for maintenance or repair, replace the coolant with fresh Antifreeze 50/50 Premix.

MAINTENANCE
Cooling System
Radiator and Cooling Fan

Always check and clean the screen and radiator fins at the intervals outlined in the Periodic Maintenance Chart beginning on page 81. Do not obstruct or deflect air flow through the radiator by installing unauthorized accessories in front of the radiator or behind the cooling fan. Interference with the radiator air flow can lead to overheating and consequent engine damage.

NOTICE: Washing the vehicle with a high-pressure hose could damage the radiator fins and impair the radiator's effectiveness. Using a high-pressure system is not recommended.

Cooling System

Radiator Coolant Level/Changing Coolant

This procedure is required only if the cooling system has been drained for maintenance and/or repair. If the overflow bottle has run dry, the level in the radiator should also be inspected.

CAUTION! Escaping steam can cause burns. Never remove the pressure cap while the engine is warm or hot. Always allow the engine to cool before removing the pressure cap.

1. Remove the hood. See page 30.
2. Slowly remove the radiator pressure cap.
3. View the coolant level through the opening.
4. Use a funnel and slowly add coolant as needed.
5. Before reinstalling the pressure cap, bleed the system of trapped air. Remove the engine access panel behind the seats and use a flat-blade screwdriver to turn the bleed screw slightly, allowing the air to escape. Slowly add additional coolant to the radiator until air no longer escapes and only coolant flows from the bleed hole, then tighten the bleed screw.
6. Reinstall the pressure cap.

Tip: Use of a non-standard pressure cap will not allow the recovery system to function properly. Your POLARIS dealer can provide the correct replacement part.

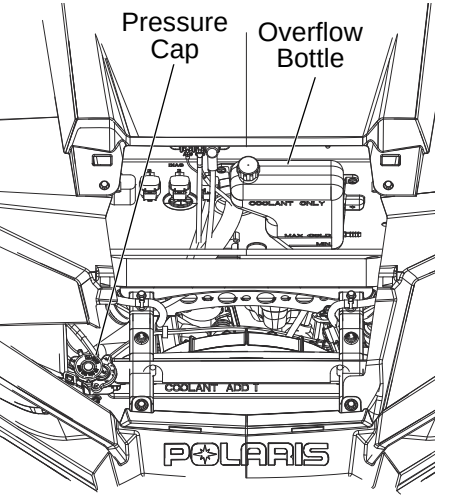

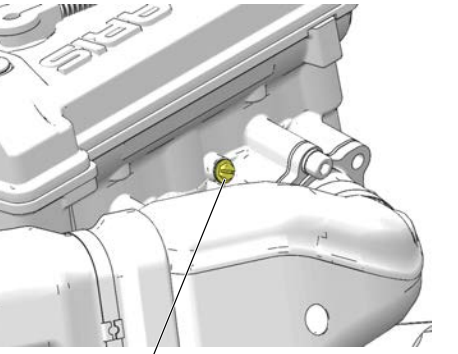

MAINTENANCE
Cooling System
Overflow Bottle Coolant Level

Always check and change the coolant at the intervals outlined in the Periodic Maintenance Chart beginning on page 81. Maintain the coolant level between the minimum and maximum marks on the bottle (when the fluid is cool). If the overflow bottle has run dry, the level in the radiator should also be inspected.

1. Position the vehicle on a level surface.
2. Remove the hood. See page 30.
3. View the coolant level in the overflow bottle.
4. Remove the cap and use a funnel to add coolant as needed to maintain the level between the two marks.
5. Reinstall the cap.

Tip: If coolant must be added often, or if the overflow bottle runs completely dry, there may be a leak in the system. Your POLARIS dealer can inspect the cooling system.

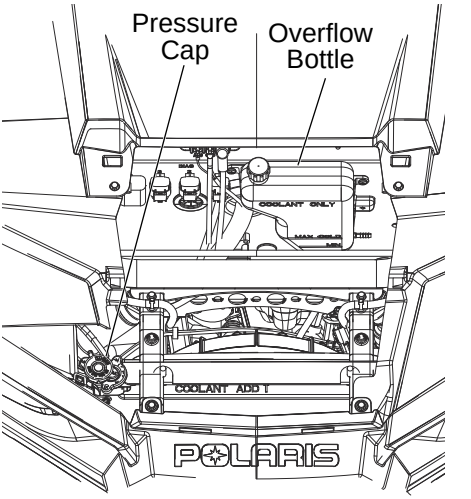

POLARIS Variable Transmission (PVT) System

⚠ WARNING

Failure to comply with the instructions in this warning can result in severe injury or death.

Do not modify any component of the PVT system. Doing so may reduce its strength so that a failure may occur at a high speed. The PVT system has been precision balanced. Any modification will cause the system to be out of balance, creating vibration and additional loads on components.

The PVT system rotates at high speeds, creating large amounts of force on clutch components. As the owner, you have the following responsibilities for your own safety and the safety of others:

- Always follow all recommended maintenance procedures. Always look for and remove debris inside and around the clutch and vent system when replacing the belt.
- See your dealer as recommended in the owner’s manual and on safety labels.
- This PVT system is intended for use on POLARIS products only. Do not install it in any other product.
- Always make sure the PVT housing is securely in place during operation.

MAINTENANCE
POLARIS Variable Transmission (PVT) System
Belt Replacement/Debris Removal

If a belt fails, always clean any debris from the duct and from the clutch and engine compartments when replacing the belt.

WARNING! Failure to remove ALL debris when replacing the belt could result in vehicle damage, loss of control and severe injury or death.

1. Allow hot components to cool before performing this procedure.
2. Remove the engine access cover and thoroughly clean all debris from the aluminum debris bracket and from the engine compartment.
3. Remove the clutch cover screws and open the clutch cover. (It does not have to be removed from the vehicle.) Remove all debris wrapped in and around the PVT system.

Tip: Use the shock/clutch tool from the tool kit to slightly open the sheaves to aid in debris removal and belt installation.

(Continued on next page)

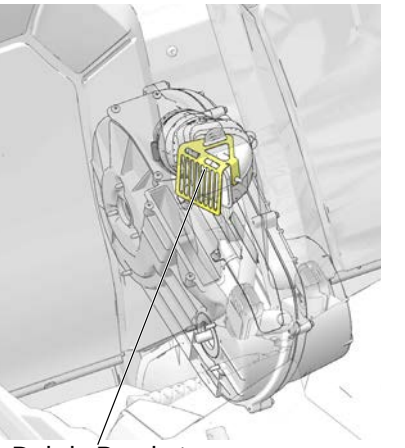

Insert hooked end of tool.

Apply force to opposite end of tool to spread sheaves.

(Non-EBS Clutch Shown)

POLARIS Variable Transmission (PVT) System

Belt Replacement/Debris Removal

4. Remove all debris from the entire clutch air duct passage.
5. Check for signs of damage to seals on the transmission and engine. If any seals appear to be damaged, your vehicle requires prompt service. Your POLARIS dealer can assist.

Tip: Belt slip is responsible for creating excessive heat that destroys belts, wears clutch components and causes outer clutch covers to fail. Switch to low range while operating at slower speeds to extend the life of the PVT components (belt, cover, etc.).

PVT Drying

There may be some instances when water is accidently ingested into the PVT system. Use the following instructions to dry it out before operating.

1. Remove the clutch cover drain plug.
2. Allow the water to drain. Reinstall the drain plug.
3. Place the transmission in PARK. Apply the brakes.
4. Start the engine.
5. Apply varying throttle for 10-15 seconds to expel the moisture and air-dry the belt and clutches. Do not hold the throttle wide open for more than 10 seconds.
6. Allow the engine RPM to settle to idle speed. Apply the brakes. Shift the transmission to the lowest available range.
7. Test for belt slippage. If the belt slips, repeat the process.
8. Your vehicle requires service as soon as possible. Your POLARIS dealer can assist.

MAINTENANCE
Air Filter

Always change the air filter at the intervals outlined in the Periodic Maintenance Chart beginning on page 81.

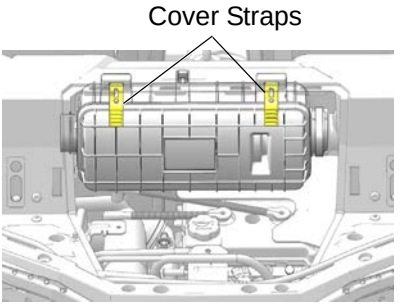

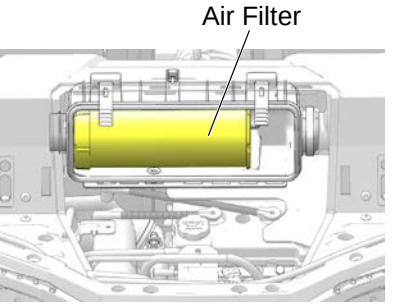

1. Remove the cargo box access panel.
2. Clean all dirt and debris from the air box area.
3. Unlatch the two (2) air box cover straps and carefully remove the air box cover.
4. Inspect the air filter and air box for dirt, debris or water.
5. To remove the filter, slide the filter toward the passenger's side of the vehicle.
6. With the filter removed, clean the intake tube and air box thoroughly. Wipe well with a clean, dry cloth.

NOTICE: Dirt or debris in the intake tube could result in severe engine damage. Always clean all dirt and debris from the intake tube before installing the filter.

7. Reinstall the air filter (if clean) or install a new air filter (if soiled). Do not attempt to clean the air filter.

NOTICE: Use of a non-POLARIS-approved air filter may cause engine damage. Always use a POLARIS-approved replacement filter. Please see your POLARIS dealer.

8. Make sure that there are no gaps between the filter and the driver’s side of the air box.
9. Reinstall the air box cover. Make sure the tabs are properly positioned into the hinge.
10. Secure the two (2) cover straps.
11. Reinstall the cargo box access panel.

Spark Arrester

⚠ WARNING

Failure to heed the following warnings while servicing the spark arrester could result in serious injury or death.

- Do not perform clean-out immediately after the engine has been run, as the exhaust system becomes very hot. Serious burns could result from contact with the exhaust components. Allow components to cool sufficiently before proceeding.
- Wear eye protection and gloves.
- Never operate without the spark arrester.
- Never run the engine in an enclosed area. Exhaust contains poisonous carbon monoxide gas that can cause loss of consciousness or death in a very short time.

Periodically clean the spark arrester to remove accumulated carbon. A plugged spark arrester will affect engine performance. Clean daily when driving in mud and water. Replace a cracked or damaged arrester before operating.

1. Remove the arrester retaining bolt and nut.
2. Remove the arrester from the end of the muffler.
3. Use a non-synthetic brush to clean the arrester screen. A synthetic brush may melt if components are warm. If necessary, blow debris from the screen with compressed air.
4. Inspect the screen for wear and damage. Replace a worn or damaged screen.
5. Reinstall the arrester. Torque bolt to 9-11 ft. lbs. (12-15 Nm).

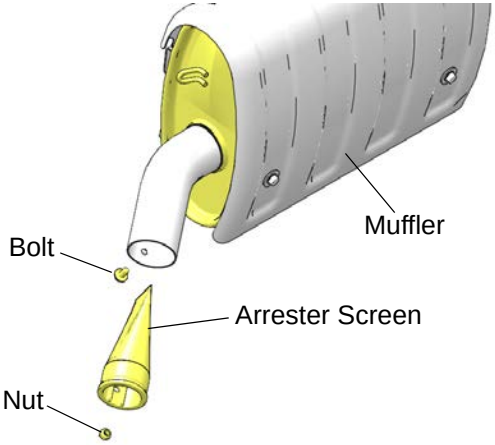

Brakes

The front and rear brakes are hydraulic disc type brakes activated by the brake pedal. See page 36.

Always check brake pedal travel and the brake fluid reservoir level before each use of the vehicle. When applied, the brake pedal should feel firm. Any sponginess would indicate a possible fluid leak or low brake fluid level, which must be corrected before riding. See page 112 for brake fluid information.

If you discover any irregularities in brake system operation, including excessive pedal travel, contact your dealer for proper diagnosis and repairs.

WARNING! Operating the vehicle with a spongy brake pedal can result in loss of braking, which could cause an accident resulting in severe injury or death. Never operate the vehicle with a spongy-feeling brake pedal.

Brakes

Brake Inspection

1. Check the brake system for fluid leaks.
2. Check the brake pedal for excessive travel or a spongy feel.
3. Check the friction pads for wear, damage and looseness.
4. Check brake discs for signs of cracks, excessive corrosion, warping or other damage. Clean any grease using an approved brake cleaner or alcohol.

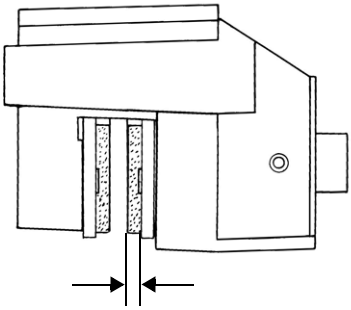

WARNING! Do not apply WD-40 or any petroleum product to brake discs. These types of products are flammable and may also reduce the friction between the brake pad and caliper.

5. Inspect the brake disc spline and pad wear surface for excessive wear. Change pads when worn to .03” (0.762 mm).

MAINTENANCE
Brakes
Brake Fluid

Inspect the level of the brake fluid before each operation. If the fluid level is low add DOT 4 brake fluid only. See page 141 for the part numbers of POLARIS products.

WARNING! After opening a bottle of brake fluid, always discard any unused portion. Never store or use a partial bottle. Brake fluid is hygroscopic, meaning it rapidly absorbs moisture from the air. The moisture causes the boiling temperature of the brake fluid to drop, which can lead to early brake fade and the possibility of accident or severe injury.

Change the brake fluid every two years and any time the fluid becomes contaminated, the fluid level is below the minimum, or if the type and brand of the fluid in the reservoir are unknown. Access the brake fluid reservoir through the left front wheel well.

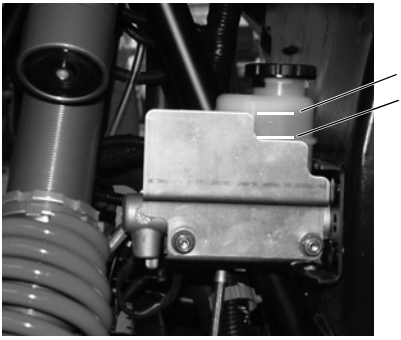

1. Position the vehicle on a level surface.
2. Place the transmission in PARK.
3. View the brake fluid level in the reservoir. The level should be between the maximum and minimum level lines.
4. If the fluid level is lower than the lower level line, add brake fluid to the upper line.
5. Apply the brake forcefully for a few seconds and check for fluid leakage around the fittings.

Suspension Settings
Sachs Socks (if equipped)

The front and rear preloads are adjustable.

The suspensions are set on the lowest setting at the factory. This setting is appropriate for nearly all riding conditions.

If desired, the suspension may be adjusted to maintain vehicle clearance height when carrying loads. Elevate the vehicle slightly for easier adjustment.

Always heed the following rules if you make adjustments to this suspension.

- Always return the suspension to the lowest setting after the load is removed from the vehicle. The increased suspension height will negatively impact vehicle stability when operating without a load.
- Always apply the same adjustment setting to *all four wheels*.
- Never operate the vehicle on the highest or second highest preload settings without a total combined payload in the vehicle of 450 lbs. (204 kg) or more. Payload includes the driver, passenger, POLARIS-approved accessories and cargo. Never exceed the stated load capacity for this vehicle. See page 133.

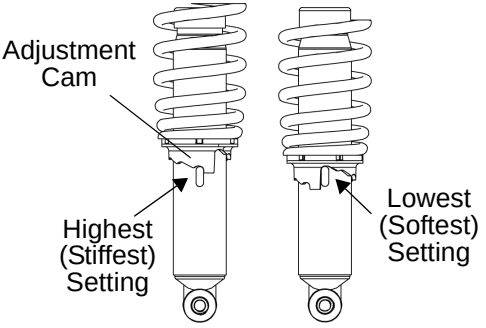

Suspension Settings

FOX Shocks (if equipped)

Spring Preload Adjustment

The factory setting is appropriate for nearly all riding conditions. If desired, the suspension may be adjusted to maintain ground clearance when carrying additional weight.

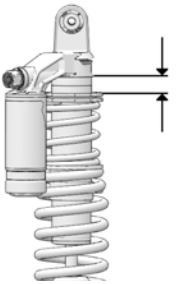

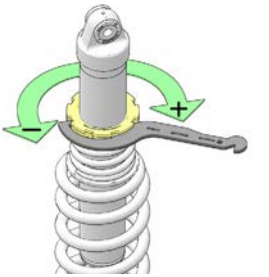

To adjust the preload, do the following:

1. Elevate the vehicle to allow the suspension to fully extend.
2. Loosen the jam nut and back it away from the adjusting ring.
3. Turn the adjusting ring to the left to add preload. Turn the adjusting ring to the right to remove preload.
4. Tighten the jam nut firmly against the adjuster ring.

Factory Preload Settings

Location	RZR S Base	RZR 4
Front	7.94” (202 mm)	6.08” (154 mm)
Rear	3.31” (84 mm)	1.15” (29 mm)

Follow these guidelines if you make adjustments to this suspension.

- Always return the suspension to the factory setting after the load is removed from the vehicle. The increased suspension height will negatively impact vehicle stability when operating without a load.
- Always apply the same adjustment setting to *all four wheels*.

Do not increase the spring preload by more than one inch (25.4 mm) over the factory setting.

Suspension Settings

FOX Shocks (if equipped)

Shock Compression Adjustment

The compression damping clicker knob is located at the top of the shock resivoir.

1. Turn the clicker clockwise to increase compression damping.
2. Turn the clicker counter-clockwise to decrease compression damping.

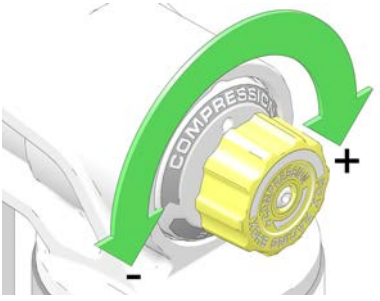

Factory Preload Settings

Setting	Compression Damping
Softest	Full counter-clockwise position (24 clicks)
Factory	Center position (12 clicks)
Firmest	Full clockwise position (0 clicks)

WARNING! Uneven adjustment may cause poor handling of the vehicle, which could result in an accident. Always adjust both the left and right spring preloads equally or have your POLARIS dealer perform the adjustments.

Suspension Settings

Walker Shocks (if equipped)

The factory setting is appropriate for nearly all riding conditions. If desired, the suspension may be adjusted to maintain ground clearance when carrying additional weight.

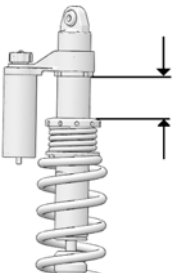

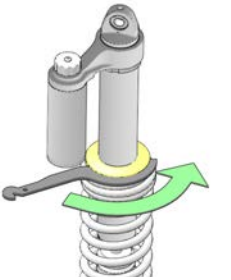

To adjust the preload, do the following:

1. Elevate the vehicle to allow the suspension to fully extend.
2. Turn the adjusting ring to the left to add preload. Turn the adjusting ring to the right to remove preload.

Factory Preload Settings

Location	RZR S EPS
Front	6.10” (155 mm)
Rear	3.31” (84 mm)

Follow these guidelines if you make adjustments to this suspension.

- Always return the suspension to the factory setting after the load is removed from the vehicle. The increased suspension height will negatively impact vehicle stability when operating without a load.
- Always apply the same adjustment setting to *all four wheels*.

Do not increase the spring preload by more than one inch (25.4 mm) over the factory setting.

Suspension Settings
Walker Shocks (if equipped)
Shock Compression Adjustment

The compression damping clicker knob is located at the top of the shock resivoir.

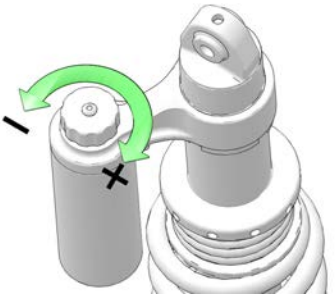

1. Turn the clicker clockwise to increase compression damping.
2. Turn the clicker counter-clockwise to decrease compression damping.

Factory Preload Settings

Setting	Compression Damping
Softest	Full counter-clockwise position (16 clicks)
Factory	Center position (8 Clicks)
Firmest	Full clockwise position (0 clicks)

MAINTENANCE
Tires

⚠ WARNING

Operating your vehicle with worn tires will increase the possibility of skidding, loss of control and an accident, which could result in serious injury or death. Always replace tires when the tread depth measures 1/8” (3 mm) or less.

Improper tire inflation or the use of non-standard size or type of tires may adversely affect vehicle handling, which could result in vehicle damage or personal injury. Always maintain proper tire pressure. Always use POLARIS-approved size and type of tires for this vehicle when replacing tires.

Tire Tread Depth

Always replace tires when tread depth is worn to 1/8" (3 mm) or less.

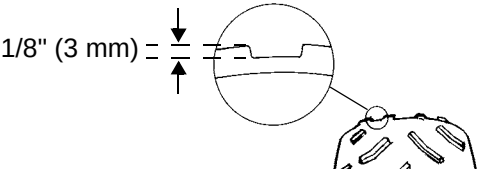

Axle and Wheel Nut Torque Specifications

Inspect the following items occasionally for tightness, and if they've been loosened for maintenance service. *Do not lubricate the stud or the lug nut.*

Lug Nut (Aluminum Wheels) 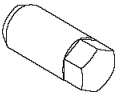	Front and Rear	120 ft. lbs. (162.7 Nm)
Lug Nut (Steel Wheels)	Front and Rear	60 ft. lbs. (81.3 Nm)
Hub Retaining Nut	Front and Rear	110 ft. lbs. (149 Nm)

Tires

Wheel Removal

1. Position the vehicle on a level surface.
2. Place the transmission in PARK. Stop the engine.
3. Loosen the wheel nuts slightly.
4. Elevate the side of the vehicle by placing a suitable stand under the frame.
5. Remove the wheel lug nuts. Remove the wheel.

Wheel Installation

1. Place the transmission in PARK.
2. Place the wheel in the correct position on the wheel hub. Be sure the valve stem is toward the outside and rotation arrows on the tire point toward forward rotation.

WARNING! Improperly installed wheels can adversely affect tire wear and vehicle handling, which can result in serious injury or death. Always ensure that all nuts are torqued to specification. Do not service axle nuts that have a cotter pin installed. Your POLARIS dealer can assist.

Right Rear Wheel (type varies by model)

3. Attach the wheel nuts and washers and finger tighten.
4. Carefully lower the vehicle to the ground.
5. Torque the wheel nuts to specification. See page 118.

Lights

Headlight and taillight lenses become dirty during normal operation. Clean all lights frequently to ensure a clear field of vision as well as visibility to other vehicles.

Tip: If an LED headlamp has moisture or fogging inside, disconnect the wiring harness from the headlamp(s) for a few days to allow the moisture to clear out.

Taillight/Brake Light Replacement

The taillight assembly is not serviceable. If the taillight or brake light fails to operate properly, replace the entire taillight assembly.

Headlight Replacement

If a headlight becomes damaged or inoperable, the entire headlight assembly must be replaced. Do not operate this vehicle at night or in low light conditions until the headlight is replaced. Always make sure lights are adjusted properly for best visibility.

Lights

Headlight Beam Adjustment

The headlight beam can be adjusted slightly upward or downward and to the left or right.

1. Position the vehicle on a level surface. The headlight should be approximately 25 ft. (7.6 m) from a wall.

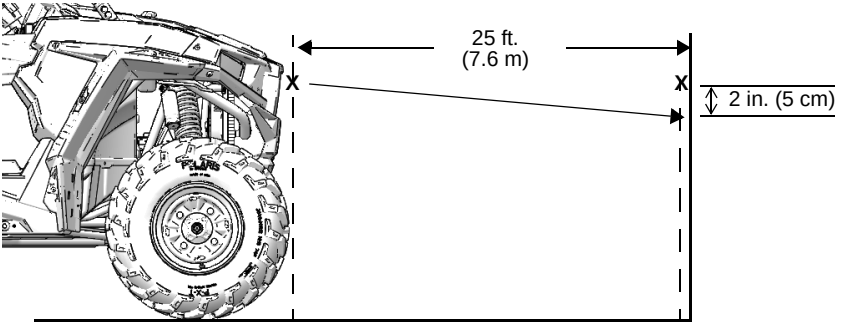

2. Place the transmission in PARK.
3. Measure the distance from the floor to the center of the headlight and make a mark on the wall at the same height.
4. Apply the brakes. Start the engine. Turn the headlights to high beam.
5. Include the weight of a rider on the seat while performing this step. Observe the headlight aim. As a starting point, the most intense part of the headlight beam should be 2 inches (5 cm) below the mark on the wall. Adjust to operator preference.

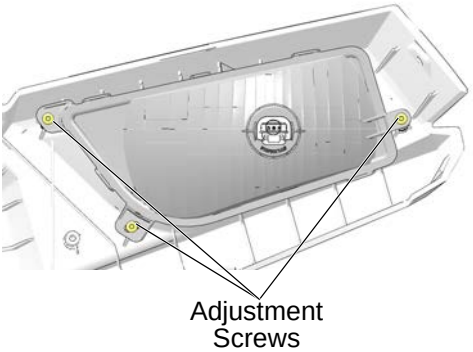

6. Tighten or loosen the three (3) headlight screws on the rear of the headlight to adjust the beam upward or downward or to the left or right.

MAINTENANCE
Vehicle Immersion

NOTICE: If your vehicle becomes immersed, major engine damage can result if the machine is not thoroughly inspected. Take the vehicle in for service before starting the engine. Your POLARIS dealer can provide this service.

If it's impossible to take your vehicle to a dealer before starting it, follow the steps outlined below.

1. Move the vehicle to dry land.
2. Check the air box. See page 108. If water is present, dry the air box and replace the filter with a new filter.
3. Remove the fuse/relay center cover. See page 100. Allow any moisture to dry, then reinstall the cover.
4. Dry the spark plug wells with a clean cloth, then remove the spark plugs.
5. Turn the engine over several times.
6. Dry the spark plugs and reinstall them, or install new plugs.
7. Attempt to start the engine. If necessary, repeat the drying procedure.
8. Take the vehicle in for service as soon as possible, whether you succeed in starting it or not. Your POLARIS dealer can provide the required service.
9. If water has been ingested into the PVT follow the procedure on page 107 for drying.

Steering Wheel Inspection

Check the steering wheel for specified freeplay and smooth operation at the intervals outlined in the Periodic Maintenance Chart beginning on page 81.

1. Position the vehicle on level ground.
2. Lightly turn the steering wheel left and right.
3. There should be 0.8-1.0” (20-25 mm) of freeplay.
4. If there is excessive freeplay or strange noises, or if the steering feels rough or “catchy,” have the steering system inspected by an authorized POLARIS dealer.

Battery

⚠ WARNING

Improperly connecting or disconnecting battery cables can result in an explosion and cause serious injury or death. When removing the battery, always disconnect the negative (black) cable first. When reinstalling the battery, always connect the negative (black) cable last.

Your vehicle has an automotive-type sealed battery, which requires little maintenance. Always keep battery terminals and connections free of corrosion. If cleaning is necessary, remove the corrosion with a stiff wire brush. Wash with a solution of one tablespoon baking soda and one cup water. Rinse well with tap water and dry off with clean shop towels. Coat the terminals with dielectric grease or petroleum jelly.

Battery Removal

1. Remove the driver's seat (RZR/RZR S) or the left rear passenger seat (RZR 4). See page 28.
2. Disconnect the black (negative) battery cable first.
3. Disconnect the red (positive) battery cable last.
4. Remove the battery hold-down strap.
5. Lift the battery out of the vehicle.

Battery

Battery Installation

Using a new battery that has not been fully charged can damage the battery and result in a shorter life. It can also hinder vehicle performance. Follow the battery charging instructions on page 126 before installing the battery.

1. Ensure that the battery is fully charged.
2. Place the battery in the battery holder.
3. Coat the terminals with dielectric grease or petroleum jelly.
4. Secure the battery hold-down strap.
5. Connect and tighten the red (positive) cable first.
6. Connect and tighten the black (negative) cable last.
7. Verify that cables are properly routed.
8. Reinstall the driver’s seat.

Battery Storage

Whenever the vehicle is not used for a period of three months or more, recharge the battery about once a month to make up for normal self-discharge (see page 126), or use a POLARIS Battery Tender, which can be left connected during the storage period. Battery Tender will automatically charge the battery if voltage drops below a pre-determined point. See page 141 for the part numbers of POLARIS products.

During the storage period, park the vehicle out of the sun in a cool, dry place or remove the battery and store it in a cool, dry place.

MAINTENANCE

Battery

Battery Charging

The following battery charging instructions apply only to the installation of a sealed battery. Read all instructions before proceeding with the installation of this battery.

The sealed battery is already filled with electrolyte and has been sealed and *fully charged* at the factory. *Never* pry the sealing strip off or add any other fluid to this battery.

A sealed battery must always be maintained with a full charge. Since the battery is sealed and the sealing strip cannot be removed, you must use a voltmeter or multimeter to measure DC voltage.

WARNING! An overheated battery may explode, causing severe injury or death. Always watch charging times carefully. Stop charging if the battery becomes very warm to the touch. Allow it to cool before resuming charging.

For a refresh charge, follow all instructions carefully.

1. The battery should be disconnected from a load or charger for at least two hours before checking voltage. Check the battery voltage with a voltmeter or multimeter. A fully charged battery will register 12.8 V or higher.
2. If the voltage is less than 12.8 volts, recharge the battery at 1.2 amps or less until battery voltage is 12.8 or greater.
3. When using an automatic charger, refer to the charger manufacturer's instructions for recharging. When using a constant current charger, use the guidelines on the next page for recharging.

Battery

Battery Charging

Always verify battery condition before and 1-2 hours after the end of charging.

State of Charge	Voltage	Action	Charge Time (Using constant current charger @ standard amps specified on top of battery)
100%	12.8-13.0 volts	None, check at 3 mos. from date of manufacture	None required
75%-100%	12.5-12.8 volts	May need slight charge, if no charge given, check in 3 months	3-6 hours
50%-75%	12.0-12.5 volts	Needs charge	5-11 hours
25%-50%	11.5-12.0 volts	Needs charge	At least 13 hours, verify state of charge
0%-25%	11.5 volts or less	Needs charge with desulfating charger	At least 20 hours

MAINTENANCE
Cleaning and Storage
Washing the Vehicle

Keeping your POLARIS vehicle clean will not only improve its appearance but it can also extend the life of various components.

NOTICE: Water in the PVT system could cause the drive belt to become wet and slip in the clutches. When washing the vehicle, always avoid spraying water directly toward the PVT intake duct.

High water pressure may damage the radiator fins and impair the radiator's effectiveness. High pressure may also damage other vehicle components.

Certain products, including insect repellents and chemicals, will damage plastic surfaces. Do not allow these types of products to contact the vehicle.

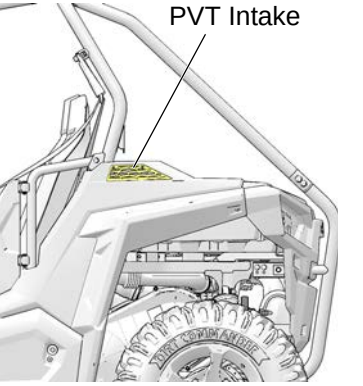

The best and safest way to clean your POLARIS vehicle is with a garden hose and a pail of mild soap and water.

1. Use a professional-type washing cloth, cleaning the upper body first and the lower parts last.
2. Rinse with clean water frequently.
3. Dry surfaces with a chamois to prevent water spots.

Washing Tips

- Avoid the use of harsh cleaners, which can scratch the finish.
- Do not use a power washer to clean the vehicle.
- Do not use medium to heavy duty compounds on the finish.
- Always use clean cloths and pads for cleaning and polishing. Old or reused cloths and pads may contain dirt particles that will scratch the finish.

Cleaning and Storage

Washing the Vehicle

If a high pressure water system is used for cleaning (not recommended), exercise extreme caution. The water may damage components and could remove paint and labels. Avoid directing the water stream at the following items:

- Wheel bearings
- Radiator
- Transmission seals
- Brakes
- Cab and body panels
- Labels and decals
- Electrical components and wiring
- Air intake components

If warning and safety labels are damaged, contact your POLARIS dealer for free replacement.

Grease all zerk fittings immediately after washing. Allow the engine to run for a while to evaporate any water that may have entered the engine or exhaust system.

Polishing the Vehicle

POLARIS recommends the use of common household aerosol furniture polish for polishing the finish on your POLARIS vehicle. Follow the instructions on the container.

Polishing Tips

- Avoid the use of automotive products, some of which can scratch the finish of your vehicle.
- Always use clean cloths and pads for cleaning and polishing. Old or reused cloths and pads may contain dirt particles that will scratch the finish.

MAINTENANCE
Cleaning and Storage
Storage Tips

NOTICE: Starting the engine during the storage period will disturb the protective film created by fogging and damage could occur. Never start the engine during the storage period.

Clean the Exterior

Make any necessary repairs and clean the vehicle as recommended. See page 128.

Stabilize the Fuel

1. Fill the fuel tank.
2. Add POLARIS Carbon Clean Fuel Treatment or POLARIS Fuel Stabilizer or equivalent fuel treatments or stabilizers. Follow the instructions on the container for the recommended amount. Carbon Clean removes water from fuel systems, stabilizes fuel and removes carbon deposits from pistons, rings, valves and exhaust systems.
3. Allow the engine to run for 15-20 minutes to allow the stabilizer to disperse through the entire fuel delivery system.

Oil and Filter

Change the oil and filter. See page 92.

Air Filter / Air Box

Replace the air filter. See page 108. Clean the air box.

Fluid Levels

Inspect the fluid levels. Add or change fluids as recommended in the Periodic Maintenance Chart beginning on page 81.

- Demand drive fluid (front gearcase)
- Rear gearcase fluid (if equipped)
- Transmission fluid
- Brake fluid (change every two years and any time the fluid looks dark or contaminated)
- Coolant (test strength/fill)

Cleaning and Storage

Storage Tips

Inspect and Lubricate

Inspect all cables and lubricate all areas of the vehicle as recommended in the Periodic Maintenance Chart beginning on page 81.

Fog the Engine

1. Treat the fuel system with POLARIS Carbon Clean or other equivalent fuel treatment. Follow the instructions on the container. Start the engine. Allow it to idle for several minutes so the Carbon Clean reaches the injectors. Stop the engine.
2. Remove the spark plugs and add 2-3 tablespoons of engine oil. To access the plug holes, use a section of clear 1/4" hose and a small plastic squeeze bottle filled with the pre-measured amount of oil. *Do this carefully! If you miss the plug holes, oil will drain from the spark plug cavities into the hole at the front of the cylinder head, and appear to be an oil leak.*
3. Reinstall the spark plugs. Torque to specification. See page 99.
4. Apply dielectric grease to the inside of each spark plug cap. *Do not reinstall the caps onto the plugs at this step*.
5. Turn the engine over several times. Oil will be forced in and around the piston rings and ring lands, coating the cylinder with a protective film of fresh oil.
6. If POLARIS fuel system additive is not used, fuel tank, fuel lines, and injectors should be completely drained of gasoline.
7. Reinstall the spark plug caps to the spark plugs.

Battery Maintenance

See pages 125-127 for storage and charging procedures.

Storage Area/Covers

Be sure the storage area is well ventilated. Cover the vehicle with a genuine POLARIS cover. Do not use plastic or coated materials. They do not allow enough ventilation to prevent condensation, and may promote corrosion and oxidation.

MAINTENANCE

Cleaning and Storage

Removal from Storage

1. Charge the battery if necessary.
2. Make sure the spark plug is tight.
3. Fill the fuel tank with fuel.
4. Check all the points listed in the Daily Pre-Ride Inspection section on page 51. Tightness of the bolts, nuts and other fasteners should be checked by an authorized POLARIS dealer or other qualified service facility.
5. Lubricate at the intervals outlined in the Periodic Maintenance Chart beginning on page 81.

WARNING! Engine exhaust contains poisonous carbon monoxide and can cause loss of consciousness or death. Never run an engine in an enclosed area.

Transporting the Vehicle

Follow these procedures when transporting the vehicle.

1. Place the transmission in PARK. Stop the engine.
2. Slowly release the brake pedal and make sure the transmission is in PARK before exiting the vehicle.
3. Remove the key to prevent loss during transporting.
4. Secure the hood, doors, access panels, fuel cap and seats. Ensure that the seats are attached correctly and are not loose.

WARNING! Cargo and other loose vehicle parts may fly off while transporting this vehicle. Secure or remove all cargo, and inspect the unit for loose parts prior to transport.

5. Always tie the frame of the POLARIS vehicle to the transporting unit securely with suitable straps or rope. Do not attach tie straps to the front control arm bolt pockets.

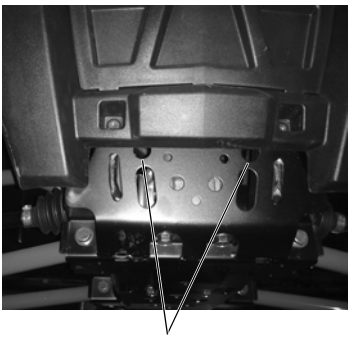

2 Front Tie-Down Points

2 Rear Tie-Down Points

RZR 900 / *RZR* 900 EPS	
Gross Vehicle Weight	RZR 900/EPS Trail: 1971 lbs. (894 kg)
Dry Weight	RZR 900/EPS Trail: 1150 lbs. (521.6 kg)
Test GVW - Rollover Protection System (ROPS)	2300 lbs. (1043 kg) per OSHA 29 CFR 1928.53
Rear Cargo Box Capacity	300 lbs. (136 kg)
Maximum Weight Capacity (Payload)	740 lbs. (336.4 kg) (riders, cargo, accessories, tongue weight)
Towing Capacity	1500 lbs. (682 kg)
Hitch Tongue Capacity	150 lbs. (68 kg)
Fuel Capacity	9.5 gal. (36 l)
Engine Oil Capacity	2.5 qts. (2.4 l)
Coolant Capacity	5 qts. (4.7 l)
Demand Drive Fluid Capacity	7.5 oz. (222 ml)
Transmission Oil Capacity	44 oz. (1300 ml) Turf Models: 40.5 oz. (1200 ml)
Overall Length/Width/Height	RZR 900: 107/50/69.5 in. (271.8/127/176.5 cm) EPS TRAIL: 107/50/69.5 in. (271.8/127/176.5 cm)
Wheelbase	79 in. (200 cm)
Ground Clearance	RZR 900: 10 in. (25.4 cm) EPS TRAIL: 10 in. (25.4 cm)
Engine	4-Stroke DOHC Twin Cylinder
Displacement	875 cc
Bore x Stroke	93 mm x 64.4 mm
Alternator Output	560 W @ 3000 RPM
Compression Ratio	10.5:1
Starting System	Electric
Fuel System	Electronic fuel injection
Ignition System	Electronic
Spark Plug / Gap	NGK MR7F / 0.7-0.8 mm
Front Suspension	Independent double a-arm with 10 in. (25.4 cm) of travel
Rear Suspension	Independent double a-arm with 10 in. (25.4 cm) of travel

SPECIFICATIONS

RZR 900 / *RZR* 900 EPS	
Lubrication System	Wet Sump
Driving System Type	Automatic POLARIS Variable Transmission, EPS: Lockable Differential
Shift Type	Dual Range P/R/N/L/H
Tires / Tire Pressure - Front	RZR 900/EPS TRAIL: PXT 26x8-12 / 10 psi (69 kPa)
Tires / Tire Pressure - Rear	RZR 900/EPS TRAIL: PXT 26x9-12 / 12 psi (83 kPa)
Brakes, Front/Rear	Foot Activated, 4-wheel hydraulic disc
Headlights	2 Dual Beam Halogen or LED
Taillights	2 LED cluster
Brake Lights	2 LED cluster
Instrument Cluster	Analog and LCD
Auxiliary DC Outlet	12V

Output Gear Ratios		
Rear		
High Gear	10.73	
Low Gear	18.77	
Reverse	20.41	
Front (including front drive)		
	Non-EPS	**EPS**
High Gear	13.71	11.88
Low Gear	23.94	20.74
Reverse	26.07	22.59
Drive Ratio - Front	3.82	3.31

Clutching

Please see your POLARIS dealer for clutching specifications.

RZR S 900 / *RZR* S 900 EPS	
Gross Vehicle Weight	2025 lbs. (918 kg)
Dry Weight	1204 lbs. (546 kg)
Test GVW - Rollover Protection System (ROPS)	2300 lbs. (1043 kg) per OSHA 29 CFR 1928.53
Rear Cargo Box Capacity	300 lbs. (136 kg)
Maximum Weight Capacity (Payload)	740 lbs. (336.4 kg) (riders, cargo, accessories, tongue weight)
Towing Capacity	1500 lbs. (682 kg)
Hitch Tongue Capacity	150 lbs. (68 kg)
Fuel Capacity	9.5 gal. (36 l)
Engine Oil Capacity	2.5 qts. (2.4 l)
Coolant Capacity	5 qts. (4.7 l)
Demand Drive Fluid Capacity	7.5 oz. (222 ml)
Transmission Oil Capacity	44 oz. (1300 ml)
Overall Length/Width/Height	108/60/72 in. (274.3/152.4/182.9 cm)
Wheelbase	79 in. (200 cm)
Ground Clearance	12.5 in. (31.75 cm)
Engine	4-Stroke DOHC Twin Cylinder
Displacement	875 cc
Bore x Stroke	93 mm x 64.4 mm
Alternator Output	560 W @ 3000 RPM
Compression Ratio	10.5:1
Starting System	Electric
Fuel System	Electronic fuel injection
Ignition System	Electronic
Spark Plug / Gap	NGK MR7F / 0.7-0.8 mm
Front Suspension	Independent double a-arm with 12.25 in. (31.1 cm) of travel
Rear Suspension	Independent double a-arm with 13.2 in. (33.5 cm) of travel

SPECIFICATIONS

RZR S 900 / *RZR* S 900 EPS	
Lubrication System	Wet Sump
Driving System Type	Automatic POLARIS Variable Transmission EPS: Lockable Differential
Shift Type	Dual Range P/R/N/L/H
Tires / Tire Pressure - Front	Dirt Commander 27x9-12 / 10 psi (69 kPa)
Tires / Tire Pressure - Rear	Dirt Commander 27x11-12 / 14 psi (97 kPa)
Brakes, Front/Rear	Foot Activated, 4-wheel hydraulic disc
Headlights	2 Dual Beam Halogen or LED
Taillights	2 LED cluster
Brake Lights	2 LED cluster
Instrument Cluster	Analog and LCD
Auxiliary DC Outlet	12V

Output Gear Ratios		
Rear		
High Gear	10.73	
Low Gear	18.77	
Reverse	20.41	
Front (including front drive)		
	Non-EPS	**EPS**
High Gear	13.71	11.88
Low Gear	23.94	20.74
Reverse	26.07	22.59
Drive Ratio - Front	3.82	3.31

Clutching

Please see your POLARIS dealer for clutching specifications.

RZR 4 900 EPS	
Gross Vehicle Weight	2442 lbs. (1107.7 kg)
Dry Weight	1476 lbs. (669.5 kg)
Test GVW - Rollover Protection System (ROPS)	2700 lbs. (1225 kg) per OSHA 29 CFR 1928.53
Rear Cargo Box Capacity	300 lbs. (136 kg)
Maximum Weight Capacity (Payload)	900 lbs. (408.2 kg) (riders, cargo, accessories, tongue weight)
Towing Capacity	1500 lbs. (682 kg)
Hitch Tongue Capacity	150 lbs. (68 kg)
Fuel Capacity	9.5 gal. (36 l)
Engine Oil Capacity	2.5 qts. (2.4 l)
Coolant Capacity	5.7 qts. (5.4 l)
Demand Drive Fluid Capacity	9.3 oz. (275 ml)
Transmission Oil Capacity	44 oz. (1300 ml)
Overall Length/Width/Height	138/60/72 in. (350.5/152.4/182.9 cm)
Wheelbase	106.5 in. (271 cm)
Ground Clearance	12.5 in. (31.75 cm)
Engine	4-Stroke DOHC Twin Cylinder
Displacement	875 cc
Bore x Stroke	93 mm x 64.4 mm
Alternator Output	560 W @ 3000 RPM
Compression Ratio	10.5:1
Starting System	Electric
Fuel System	Electronic fuel injection
Ignition System	Electronic
Spark Plug / Gap	NGK MR7F / 0.7-0.8 mm
Front Suspension	Independent double a-arm with 12.25 in. (31.1 cm) of travel
Rear Suspension	Independent double a-arm with 13.2 in. (33.5 cm) of travel

SPECIFICATIONS

RZR 4 900 EPS	
Lubrication System	Wet Sump
Driving System Type	Automatic POLARIS Variable Transmission EPS: Lockable Differential
Shift Type	Dual Range P/R/N/L/H
Tires / Tire Pressure - Front	Dirt Commander 27x9-12 / 16 psi (110 kPa)
Tires / Tire Pressure - Rear	Dirt Commander 27x11-12 / 20 psi (138 kPa)
Brakes, Front/Rear	Foot Activated, 4-wheel hydraulic disc
Headlights	2 Dual Beam Halogen
Taillights	2 LED cluster
Brake Lights	2 LED cluster
Instrument Cluster	Analog and LCD
Auxiliary DC Outlet	2 12V

Output Gear Ratios	
Rear	
High Gear	12.05
Low Gear	18.79
Reverse	22.92
Front (including front drive)	
High Gear	12.82
Low Gear	19.98
Reverse	24.41
Drive Ratio - Front	3.18

Clutching

Please see your POLARIS dealer for clutching specifications.

RZR S 1000 EPS	
Gross Vehicle Weight	2056 lbs. (933 kg)
Dry Weight	1235 lbs. (560 kg)
Test GVW - Rollover Protection System (ROPS)	2300 lbs. (1043 kg) per OSHA 29 CFR 1928.53
Rear Cargo Box Capacity	300 lbs. (136 kg)
Maximum Weight Capacity (Payload)	740 lbs. (336.4 kg) (including riders, cargo, accessories, tongue weight)
Fuel Capacity	9.5 gal. (36 l)
Engine Oil Capacity	2.5 qts. (2.4 l)
Coolant Capacity	5 qts. (4.7 l)
Demand Drive Fluid Capacity	7.5 oz. (222 ml)
Transmission Oil Capacity	44 oz. (1300 ml)
Overall Length/Width/Height	108/60/72 in. (274.3/152.4/182.9 cm)
Wheelbase	79 in. (200 cm)
Ground Clearance	12.5 in. (31.75 cm)
Engine	4-Stroke DOHC Twin Cylinder
Displacement	999 cc
Bore x Stroke	93mm x 73.5mm
Alternator Output	560 W @ 3000 RPM
Compression Ratio	11.0:1
Starting System	Electric
Fuel System	Electronic fuel injection
Ignition System	Electronic
Spark Plug / Gap	NGK MR7F / 0.7-0.8 mm
Front Suspension	Independent double a-arm with 12.25 in. (31.1 cm) of travel
Rear Suspension	Independent double a-arm with 13.2 in. (33.5 cm) of travel

SPECIFICATIONS

RZR S 1000 EPS	
Lubrication System	Wet Sump
Driving System Type	Automatic POLARIS Variable Transmission EPS: Lockable Differential
Shift Type	Dual Range P/R/N/L/H
Tires / Tire Pressure - Front	Dirt Commander 27x9-12 / 10 psi (69 kPa)
Tires / Tire Pressure - Rear	Dirt Commander 27x11-12 / 14 psi (97 kPa)
Brakes, Front/Rear	Foot Activated, 4-wheel hydraulic disc
Headlights	2 Dual Beam Halogen or LED
Taillights	2 LED cluster
Brake Lights	2 LED cluster
Instrument Cluster	Analog and LCD
Auxiliary DC Outlet	12V

Output Gear Ratios		
Rear		
High Gear	10.73	
Low Gear	18.77	
Reverse	20.41	
Front (including front drive)		
	Non-EPS	**EPS**
High Gear	13.71	11.88
Low Gear	23.94	20.74
Reverse	26.07	22.59
Drive Ratio - Front	3.82	3.31

Clutching

Please see your POLARIS dealer for clutching specifications.

Part Number	Description
Engine Lubricant	
2870791	Fogging Oil (12 oz./355 ml Aerosol)
2876244	PS-4 Full Synthetic 5W-50 4-Cycle Oil (qt./.95 l)
2876245	PS-4 Full Synthetic 5W-50 4-Cycle Oil (gal./3.8 l)
2878920	PS-4 Extreme Duty Synthetic 10W-50 4-Cycle Oil (qt./.95 l)
2878919	PS-4 Extreme Duty Synthetic 10W-50 4-Cycle Oil (gal./3.8 l)
Gearcase / Transmission Lubricants	
2878068	AGL Full Synthetic Gearcase Lubricant & Transmission Fluid (qt./.95 l)
2878069	AGL Full Synthetic Gearcase Lubricant & Transmission Fluid (gal./3.8 l)
2877922	Demand Drive Fluid (qt./.95 l)
2877923	Demand Drive Fluid (gal./3.8 l)
2870465	Pump for Gallon (3.8 l) Jug
Coolant	
2880514	Antifreeze 50/50 Premix (qt./.95 l)
2880513	Antifreeze 50/50 Premix (gal./3.8 l)
Grease / Specialized Lubricants	
2871312	Grease Gun Kit, All Season Grease
2871322	All Season Grease (3 oz./89 ml cartridge)
2871423	All Season Grease (14 oz./414 ml cartridge)
2876160	ATV Angle Drive Fluid (qt./.95 l)
2872276	ATV Angle Drive Fluid (2.5 gal./9.5 l)
2871460	Premium Starter Grease
2871515	U-Joint Grease (3 oz./89 ml cartridge)
2871551	U-Joint Grease (14 oz./414 ml cartridge)
2871329	Dielectric Grease (Nyogel™)
Additives / Miscellaneous	
2871326	Carbon Clean
2870652	Fuel Stabilizer
2872189	DOT 4 Brake Fluid

TROUBLESHOOTING
Drive Belt Wear/Burn

Possible Cause	Solution
Driving onto a pickup or tall trailer in high range	Use low range during loading.
Starting out going up a steep incline	Use low range. See warnings on page 59.
Driving at low RPM or ground speed (3-7 MPH/ 5-11 km/h)	Drive at a higher speed or use low range more frequently. See page 35.
Insufficient warm-up at low ambient temperatures	Warm the engine at least 5 minutes. With the transmission in neutral, advance the throttle to about 1/8 throttle in short bursts, 5 to 7 times. The belt will become more flexible and prevent belt burning.
Slow/easy clutch engagement	Use the throttle quickly and effectively.
Hauling heavy cargo/ towing/pushing at low RPM/low ground speed	Use low range only.
Utility use/plowing	Use low range only.
Stuck in mud or snow	Shift the transmission to low range and carefully use fast, aggressive throttle application to engage clutch. **WARNING!** Excessive throttle may cause loss of control and vehicle rollover.
Climbing over large objects from a stopped position	Shift the transmission to low range and carefully use fast, brief, aggressive throttle application to engage clutch. **WARNING!** Excessive throttle may cause loss of control and vehicle rollover.
Belt slippage from water or snow ingestion into the PVT system	Dry out the PVT (see page 107). Prevent water from entering the PVT outlet duct (see page 128). Inspect clutch seals for damage if repeated leaking occurs.
Clutch malfunction	Your POLARIS dealer can assist.
Poor engine performance	Check for fouled plugs or foreign material in gas tank or fuel lines. Your POLARIS dealer can assist.
Slippage from failure to warm up belt	Always warm up the belt by operating below 30 MPH (48 km/h) for one mile (1.5 km) and for 5 miles (8 km) or more when temperature is below freezing.
Wrong or missing belt	Install the recommended belt.
Improper break-in	Always break in a new belt and/or clutch. See page 49.
Failed belt	Remove the belt and clean away any debris from the clutch box, clutch duct and engine compartment. Install a new belt. **WARNING!** Failure to remove ALL debris when replacing the belt could result in vehicle damage and severe injury or death. See page 106.

Engine Doesn't Turn Over

Possible Cause	Solution
Low battery voltage	Recharge the battery to 12.8 VDC
Loose battery connections	Check all connections and tighten
Loose solenoid connections	Check all connections and tighten
Loose electronic control box connections	Inspect, clean, reinstall connectors
Mechanical failure	Your POLARIS dealer can assist

Engine Turns Over, Fails to Start

Possible Cause	Solution
Out of fuel	Refuel
Clogged fuel filter	Your POLARIS dealer can assist
Water is present in fuel	Drain the fuel system and refuel
Old or non-recommended fuel	Replace with fresh recommended fuel
Fouled or defective spark plugs	Inspect plugs and replace if necessary
No spark to spark plug	Inspect plugs and replace if necessary
Water or fuel in crankcase	Your POLARIS dealer can assist
Low battery voltage	Recharge the battery to 12.8 VDC
Loose ignition connections	Check all connections and tighten
Mechanical failure	Your POLARIS dealer can assist

Engine Backfires

Possible Cause	Solution
Out of fuel	Refuel
Weak spark from spark plug	Inspect, clean and/or replace spark plugs
Incorrect spark plug gap or heat range	Set gap to specs or replace plugs
Old or non-recommended fuel	Replace with fresh recommended fuel
Incorrectly installed spark plug wires	Your POLARIS dealer can assist
Incorrect ignition timing	Your POLARIS dealer can assist
Loose ignition connections	Check all connections and tighten
Water present in fuel	Replace with fresh recommended fuel
Exhaust leak	Check all connections
Mechanical failure	Your POLARIS dealer can assist

TROUBLESHOOTING

Engine Pings or Knocks

Possible Cause	Solution
Poor quality or low octane fuel	Replace with recommended fuel
Incorrect ignition timing	Your POLARIS dealer can assist
Incorrect spark plug gap or heat range	Set gap to specs or replace plugs

Engine Runs Irregularly, Stalls or Misfires

Possible Cause	Solution
Fouled or defective spark plugs	Inspect, clean and/or replace spark plugs
Worn or defective spark plug wires	Your POLARIS dealer can assist
Incorrect spark plug gap or heat range	Set gap to specs or replace plugs
Loose ignition connections	Check all connections and tighten
Water present in fuel	Replace with new fuel
Low battery voltage	Recharge battery to 12.8 VDC
Kinked or plugged fuel tank vent line or filter	Inspect and replace
Kinked idle air control lines	Inspect; rotate lines to remove kink
Incorrect fuel	Replace with recommended fuel
Clogged air filter	Inspect and replace
Other mechanical failure	Your POLARIS dealer can assist
Possible Lean Fuel Cause	**Solution**
Low or contaminated fuel	Add or change fuel, clean the fuel system
Low octane fuel	Replace with recommended fuel
Clogged fuel filter	Your POLARIS dealer can assist
Low fuel pressure	Your POLARIS dealer can assist

Engine Stops or Loses Power

Possible Cause	Solution
Out of fuel	Refuel
Kinked or plugged fuel tank vent line or filter	Inspect and replace
Water is present in fuel	Replace with new fuel
Fouled or defective spark plugs	Inspect, clean and/or replace spark plug
Worn or defective spark plug wires	Your POLARIS dealer can assist
Incorrect spark plug gap or heat range	Set gap to specs or replace plug
Loose ignition connections	Check all connections and tighten
Low battery voltage	Recharge the battery to 12.8 VDC
Incorrect fuel	Replace with fresh recommended fuel
Clogged air filter	Inspect and replace
Other mechanical failure	Your POLARIS dealer can assist
Overheated engine	Clean radiator screen and core, clean engine exterior, check coolant level. Your POLARIS dealer can assist.

WARRANTY

Limited Warranty

POLARIS Industries Inc., 2100 Highway 55, Medina, MN 55340 (POLARIS) gives a SIX MONTH LIMITED WARRANTY on all components of your POLARIS vehicle against defects in material or workmanship. POLARIS further warrants that the spark arrester in this product will meet the efficiency requirements of USFS standard 5100-1C for at least 1000 hours when subjected to normal use and when maintenance and installation are in accordance with POLARIS recommendations.

This warranty covers parts and labor charges for repair or replacement of defective parts and begins on the date of purchase by the original retail purchaser. This warranty is transferable to another owner during the warranty period through a POLARIS dealer, but any such transfer will not extend the original term of the warranty. The duration of this warranty may vary by international region based upon local laws and regulations.

Registration

At the time of sale, the Warranty Registration Form must be completed by your dealer and submitted to POLARIS within ten days of purchase. Upon receipt of this registration, POLARIS will record the registration for warranty. No verification of registration will be sent to the purchaser as the copy of the Warranty Registration Form will be your proof of warranty coverage. If you have not signed the original registration and received the customer copy, please contact your dealer immediately. NO WARRANTY COVERAGE WILL BE ALLOWED UNLESS YOUR VEHICLE IS REGISTERED WITH POLARIS. Initial dealer preparation and set-up of your vehicle is very important in ensuring trouble-free operation. Purchasing a machine in the crate or without proper dealer set-up will void your warranty coverage.

Warranty Coverage And Exclusions:

Limitations Of Warranties And Remedies

This POLARIS limited warranty excludes any failures that are not caused by a defect in material or workmanship. THIS WARRANTY DOES NOT COVER CLAIMS OF DEFECTIVE DESIGN. This warranty also does not cover acts of God, accidental damage, normal wear and tear, abuse or improper handling. This warranty also does not cover any vehicle, component, or part that has been altered structurally, modified, neglected, improperly maintained or used for racing, competition or purposes other than for which it was designed.

This warranty excludes damages or failures resulting from improper lubrication; improper engine timing; improper fuel; surface imperfections caused by external stress, heat, cold or contamination; operator error or abuse; improper component alignment, tension, adjustment or altitude compensation; snow, water, dirt or other foreign substance ingestion/contamination; improper maintenance; modified components; use of aftermarket or unapproved components, accessories, or attachments; unauthorized repairs; or repairs made after the warranty period expires or by an unauthorized repair center.

Warranty Coverage And Exclusions:
Limitations Of Warranties And Remedies

This warranty excludes damages or failures caused by abuse, accident, fire, or any other cause other than a defect in materials or workmanship and provides no coverage for consumable components, general wear items, or any parts exposed to friction surfaces, stresses, environmental conditions and/or contamination for which they were not designed or not intended, including but not limited to the following items:

- Wheels and tires
- Suspension components
- Brake components
- Seat components
- Clutches and components
- Steering components
- Batteries
- Light bulbs/Sealed beam lamps
- Filters
- Lubricants
- Bushings
- Finished and unfinished surfaces
- Carburetor/Throttle body components
- Engine components
- Drive belts
- Hydraulic components and fluids
- Circuit breakers/Fuses
- Electronic components
- Spark plugs
- Sealants
- Coolants
- Bearings

Lubricants and Fluids

1. Mixing oil brands or using non-recommended oil may cause engine damage. We recommend the use of POLARIS engine oil.

2. Damage or failure resulting from the use of non-recommended lubricants or fluids is not covered by this warranty.

This warranty provides no coverage for personal loss or expense, including mileage, transportation costs, hotels, meals, shipping or handling fees, product pick-up or delivery, replacement rentals, loss of product use, loss of profits, or loss of vacation or personal time.

THE EXCLUSIVE REMEDY FOR BREACH OF THIS WARRANTY SHALL BE, AT POLARIS' OPTION, REPAIR OR REPLACEMENT OF ANY DEFECTIVE MATERIALS, COMPONENTS, OR PRODUCTS. THE REMEDIES SET FORTH IN THIS WARRANTY ARE THE ONLY REMEDIES AVAILABLE TO ANY PERSON FOR BREACH OF THIS WARRANTY. POLARIS SHALL HAVE NO LIABILITY TO ANY PERSON FOR INCIDENTAL, CONSEQUENTIAL OR SPECIAL DAMAGES OF ANY DESCRIPTION, WHETHER ARISING OUT OF EXPRESS OR IMPLIED WARRANTY OR ANY OTHER CONTRACT, NEGLIGENCE, OR OTHER TORT OR OTHERWISE. THIS EXCLUSION OF CONSEQUENTAL, INCIDENTAL, AND SPECIAL DAMAGES IS INDEPENDENT FROM AND SHALL SURVIVE ANY FINDING THAT THE EXCLUSIVE REMEDY FAILED OF ITS ESSENTIAL PURPOSE.

THE IMPLIED WARRANTY OF FITNESS FOR A PARTICULAR PURPOSE IS EXCLUDED FROM THIS LIMITED WARRANTY. ALL OTHER IMPLIED WARRANTIES (INCLUDING BUT NOT LIMITED TO THE IMPLIED WARRANTY OF MERCHANTABILITY) ARE LIMITED IN DURATION TO THE ABOVE SIX MONTH WARRANTY PERIOD. POLARIS DISCLAIMS ALL EXPRESS WARRANTIES NOT STATED IN THIS WARRANTY. SOME STATES DO NOT PERMIT THE EXCLUSION OR LIMITATION OF INCIDENTAL OR CONSEQUENTIAL DAMAGES OR ALLOW LIMITATIONS ON THE DURATION OF IMPLIED WARRANTIES, SO THE ABOVE LIMITATIONS MAY NOT APPLY TO YOU IF INCONSISTENT WITH CONTROLLING STATE LAW.

WARRANTY

How To Obtain Warranty Service

If your vehicle requires warranty service, you must take it to a POLARIS Servicing Dealer. When requesting warranty service you must present your copy of the Warranty Registration Form to the dealer. (THE COST OF TRANSPORTATION TO AND FROM THE DEALER IS YOUR RESPONSIBILITY.) POLARIS suggests that you use your original selling dealer; however, you may use any POLARIS Servicing Dealer to perform warranty service.

In the Country where your product was purchased:

Warranty or Service Bulletin repairs must be done by an authorized POLARIS dealer. If you move or are traveling within the country where your product was purchased, Warranty and Service Bulletin repairs may be requested from any authorized POLARIS dealer that sells the same line as your product.

Outside the Country where your product was purchased:

If you are traveling temporarily outside the country where your product was purchased, you should take your product to an authorized POLARIS dealer. You must show the dealer photo identification from the country of the selling dealer's authorized location as proof of residence. Upon residence verification, the servicing dealer will be authorized to perform the warranty repair.

If you move:

If you move to another country, be sure to contact POLARIS Customer Assistance and the customs department of the destination country before you move. Product importation rules vary considerably from country to country. You may be required to present documentation of your move to POLARIS in order to continue your warranty coverage. You may also be required to obtain documentation from POLARIS in order to register your product in your new country. You should warranty register your product at a local POLARIS dealer in your new country immediately after you move to continue your warranty coverage and to ensure that you receive information and notices regarding your vehicle.

If you purchase from a private party:

If you purchase a POLARIS product from a private party, to be kept and used outside of the country in which the product was originally purchased, all warranty coverage will be denied. You must nonetheless register your product under your name and address with a local POLARIS dealer in your country to ensure that you receive safety information and notices regarding your product.

Exported Products

EXCEPT WHERE SPECIFICALLY REQUIRED BY LAW, THERE IS NO WARRANTY OR SERVICE BULLETIN COVERAGE ON THIS PRODUCT IF IT IS SOLD OUTSIDE THE COUNTRY OF THE SELLING DEALER'S AUTHORIZED LOCATION. This policy does not apply to products that have received authorization for export from POLARIS. Dealers may not give authorization for export. You should consult an authorized dealer to determine this product's warranty or service coverage if you have any questions. This policy does not apply to products registered to government officials or military personnel on assignment outside the country of the selling dealer's authorized location. This policy does not apply to Safety Bulletins.

Notice

If your product is registered outside of the country where it was purchased and you have not followed the procedure set above, your product will no longer be eligible for warranty or service bulletin coverage of any kind, other than safety bulletins. Products registered to government officials or military personnel on assignment outside of the country where the product was purchased will continue to be covered by the Limited Warranty.

Please work with your dealer to resolve any warranty issues. Should your dealer require any additional assistance, they will contact the appropriate person at POLARIS.

This warranty gives you specific legal rights, and you may also have other rights which vary from state to state or in different countries. If any of the above terms are void because of federal, state, local law, all other warranty terms will remain in effect.

For questions call POLARIS Customer Assistance:

United States & Canada: 1-800-POLARIS (1-800-765-2747)

French: 1-800-268-6334

WARRANTY

U.S.A. EPA Emissions Limited Warranty

This emissions limited warranty is in addition to the POLARIS standard limited warranty for your vehicle. POLARIS Industries Inc. warrants that at the time it is first purchased, this emissions-certified vehicle is designed, built and equipped so it conforms with applicable U.S. Environmental Protection Agency emission regulations. POLARIS warrants that the vehicle is free from defects in materials and workmanship that would cause it to fail to meet these regulations.

The warranty period for off road vehicles 100cc or greater emissions-certified vehicles starts on the date of purchase by original retail purchaser and continues for a period of 500 hours of engine operation, 5000 kilometers (3100 miles) of vehicle travel, or 30 calendar months from the date of purchase, whichever comes first. The warranty period for ATVs less than 100cc emissions-certified vehicles starts on the date of purchase by original retail purchaser and continues for a period of 250 hours of engine operation, 2500 kilometers (1550 miles) of vehicle travel, or 30 calendar months from the date of purchase, whichever comes first. This EPA emissions warranty period is extended for at least as long as the standard factory warranty that Polaris provides on the vehicle as a whole. The EPA emissions warranty period does not further extend if you purchase additional warranty coverage in the form of a service contract or other paid warranty extension, but emission-related parts may be covered subject to the terms of any such paid service contract or paid warranty extension.

This emissions limited warranty covers components whose failure increases the vehicle's regulated emissions, and it covers components of systems whose only purpose is to control emissions. Repairing or replacing other components not covered by this warranty is the responsibility of the vehicle owner. This emissions limited warranty does not cover components whose failure does not increase the vehicle's regulated emissions.

For exhaust emissions, emission-related components include any engine parts related to the following systems:

- Air-induction system
- Fuel system
- Ignition system
- Exhaust gas recirculation systems

The following parts are also considered emission-related components for exhaust emissions:

- Aftertreatment devices
- Crankcase ventilation valves
- Sensors
- Electronic control units

U.S.A. EPA Emissions Limited Warranty

The following parts are considered emission-related components for evaporative emissions:

- Fuel Tank
- Fuel Cap
- Fuel Line
- Fuel Line Fittings
- Clamps*
- Pressure Relief Valves*
- Control Valves*
- Control Solenoids*
- Electronic Controls*
- Vacuum Control Diaphragms*
- Control Cables*
- Control Linkages*
- Purge Valves
- Vapor Hoses
- Liquid/Vapor Separator
- Carbon Canister
- Canister Mounting Brackets
- Carburetor Purge Port Connector

*As related to the evaporative emission control system.

Emission-related components also include any other part whose only purpose is to reduce emissions or whose failure will increase emissions without significantly degrading engine/equipment performance. The exclusive remedy for breach of this limited warranty shall be, at the exclusive option of POLARIS, repair or replacement of any defective materials, components or products. THE REMEDIES SET FORTH IN THIS LIMITED WARRANTY ARE THE ONLY REMEDIES AVAILABLE TO ANY PERSON FOR BREACH OF THIS WARRANTY. POLARIS SHALL HAVE NO LIABILITY TO ANY PERSON FOR INCIDENTAL, CONSEQUENTIAL OR SPECIAL DAMAGES OF ANY DESCRIPTION, WHETHER ARISING OUT OF EXPRESS OR IMPLIED WARRANTY OR ANY OTHER CONTRACT, NEGLIGENCE OR OTHER TORT OR OTHERWISE. THIS EXCLUSION OF CONSEQUENTIAL, INCIDENTAL, AND SPECIAL DAMAGES IS INDEPENDENT FROM AND SHALL SURVIVE ANY FINDING THAT THE EXCLUSIVE REMEDY FAILED OF ITS ESSENTIAL PURPOSE.

ALL IMPLIED WARRANTIES (INCLUDING BUT NOT LIMITED TO ANY IMPLIED WARRANTIES OF MERCHANTABILITY AND FITNESS FOR A PARTICULAR PURPOSE) ARE LIMITED IN DURATION TO THE WARRANTY PERIOD DESCRIBED HEREIN. POLARIS DISCLAIMS ALL EXPRESS WARRANTIES NOT STATED IN THIS WARRANTY. Some states do not allow limitations on how long an implied warranty lasts, so the above limitation may not apply if it is inconsistent with the controlling state law.

This limited warranty excludes failures not caused by a defect in material or workmanship. This limited warranty does not cover damage due to accidents, abuse or improper handling, maintenance or use. This limited warranty also does not cover any engine that has been structurally altered, or when the vehicle has been used in racing competition. This limited warranty also does not cover physical damage, corrosion or defects caused by fire, explosions or other similar causes beyond the control of POLARIS.

WARRANTY

U.S.A. EPA Emissions Limited Warranty

Owners are responsible for performing the scheduled maintenance identified in the owner's manual. POLARIS may deny warranty claims for failures that have been caused by the owner's or operator's improper maintenance or use, by accidents for which POLARIS has no responsibility, or by acts of God.

Any qualified repair shop or person may maintain, replace, or repair the emission control devices or systems on your vehicle. An authorized POLARIS dealer can perform any service that may be necessary for your vehicle. POLARIS also recommends POLARIS parts, however equivalent parts may be used for such service. It is a potential violation of the Clean Air Act if a part supplied by an aftermarket parts manufacturer reduces the effectiveness of the vehicle's emission controls. Tampering with emission controls is prohibited by federal law.

California Residents

Certain POLARIS Off-Road Vehicles are available in 49-state and 50-state versions. Only the 50-state models are certified for sale in California. The 50-state models available for sale in California are identified by the letter “C” in the model name (e.g., R13UH88A_C). The POLARIS 50-state models are designed and built with features such as a reduced cargo box capacity. Any modifications to these features may be a violation of the applicable California regulations and may void this limited emissions warranty offered by the manufacturer.

If you have any questions regarding your warranty rights and responsibilities, please contact POLARIS Customer Assistance:

United States & Canada: 1-800-POLARIS (1-800-765-2747)

French: 1-800-268-6334

MAINTENANCE LOG

Use the following chart to record periodic maintenance.

DATE	MILES (KM) OR HOURS	TECHNICIAN	SERVICE PERFORMED / COMMENTS

For your nearest Polaris dealer,
call 1-800-POLARIS (765-2747)
or visit www.polaris.com

Polaris Industries Inc.
2100 Highway 55
Medina, MN 55340

Part No. 9928355 Rev 02
Printed in USA